# *ATR Loop Experiments*

***ATR NSUF User Week 2010***

***Experimenter Course***

***Craig Tyler, Idaho National Laboratory***

Idaho National Laboratory

# *Objective*

- ***The objective of this presentation is to familiarize the audience with key aspects of the loop and in-pile tube test facility for future experiment planning:***
  - ***Loop Facility***
  - ***Experiment Considerations***
  - ***Test Train Interfaces***
  - ***Experiment Examples***
  - ***Loop Controls and Instrumentation***
- ***The focus will be on Test Train and Experiment Components***

# LOOP FACILITY

# Loop Facility

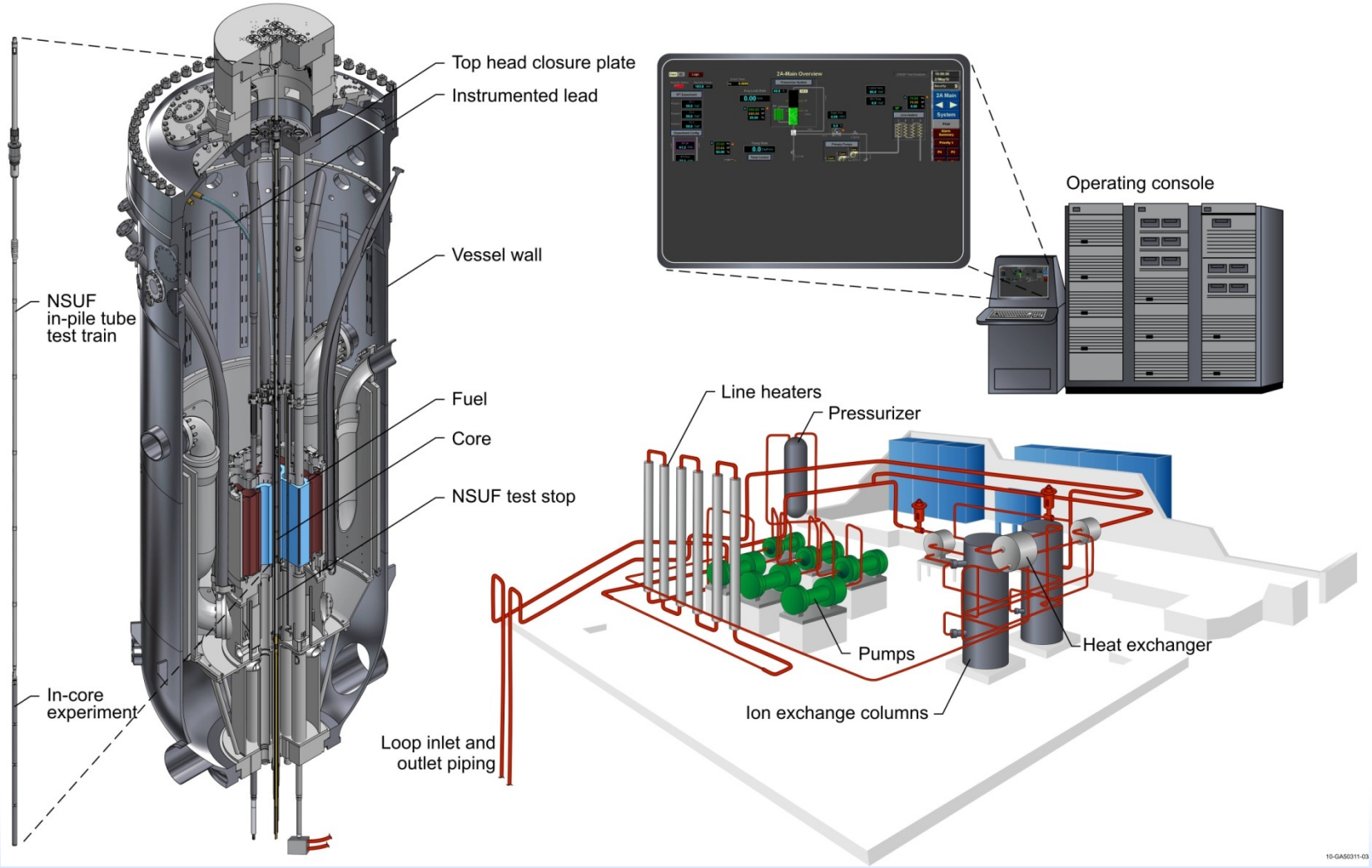

# *Pressurized Water Loops*

- ***Five flux trap positions currently have pressurized water in-pile loop tests (1 large diameter, 4 standard diameter)***
- ***A sixth, NSUF, pressurized loop will be operational in 2011***
- ***The experiment portion of the test loop that is within the reactor vessel is known as the In-Pile Tube, which is an insulated pressure vessel within the ATR reactor vessel***
- ***Each loop has its own temperature, pressure, flow & chemistry control systems that are located in the basement of the ATR building***

# EXPERIMENT CONSIDERATIONS

# Loop and Test Train Parameters

- Design Pressure: 2500 psig
- Nominal Operating Pressure: 2150 psig
- Nominal Coolant Temperature: 300C
- Example: Stainless target temperatures:  288C
- Flow: 10-80 GPM
- Coolant Conductivity:  0.1-0.15 micro S/cm
- Flow Direction:  Top down
- Upper test train components:  347 stainless steel
- In-core holders:  Zr-4, ASTM B351 or B353
- Zr-4 holders are pickled and anodized

# *Initial Planning Input*

- ***Specimen size & shape***
  - ***Must fit within 1.62 maximum inside diameter chamber within the Zirconium-4 holders***
- ***Target temperature limitations***
- ***Materials:***
    - ***Knowledge of materials required for ATR Analyses***
    - ***Prohibited:***
      - ***Unknown materials***
      - ***Explosive materials***
      - ***Cryogenic liquids***
      - ***Mercury, gold, copper, silver, chlorides-unless there is a special evaluation and approval by the INL***
- ***Desired Fluence***
  - ***Nominal Thermal Flux (2200 m/s)= 4.4E14 n/cm$^2$-s***
  - ***Nominal Fast Flux (E>1Mev)= 9.7E13 n/cm$^2$-s***
- ***Post Irradiation Examination***

# Axial Flux Profile

- ***Specimens and flux tailoring materials must maintain a relatively smooth flux profile without significant reactivity perturbations***

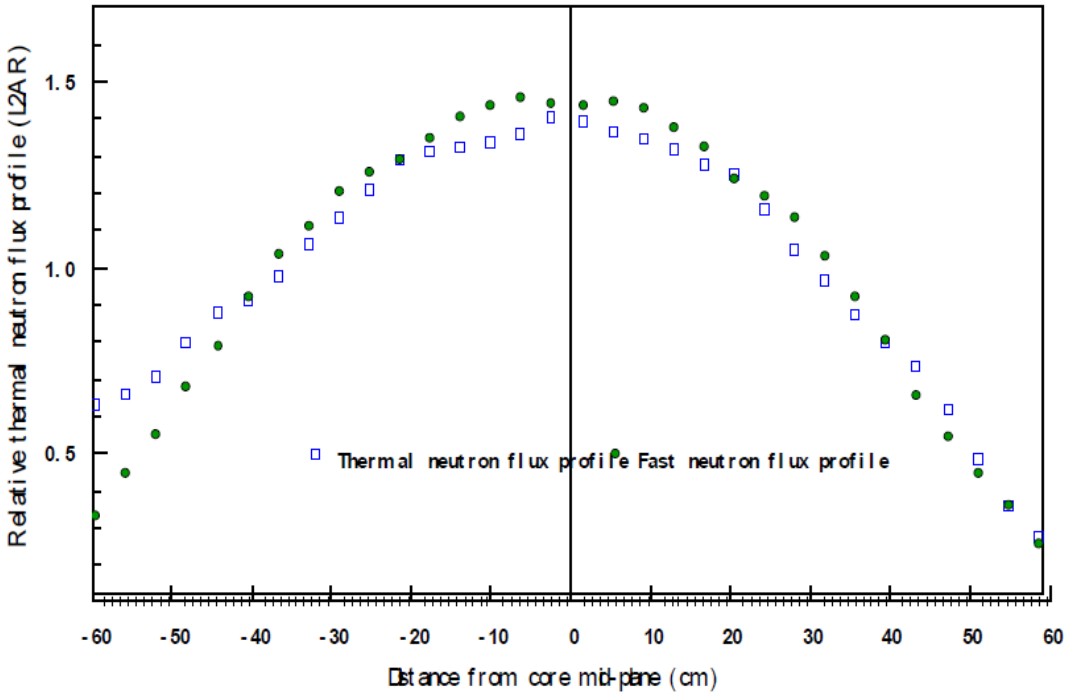

# TEST TRAIN INTERFACES

# *Reactor and In-Pile Tube (IPT) Interface*

- ***The test train is inserted into the IPT***
- ***The slightly large cylinder near the top of the train is the closure plug, which is the only pressure boundary for the test train***
- ***Following irradiation, the IPT is pulled up into a shielded cask and moved to an adjacent canal disassembly station where the in-core, or experiment, portion of the test train is removed and sent to the canal working tray for reconfiguration or off-site shipment***

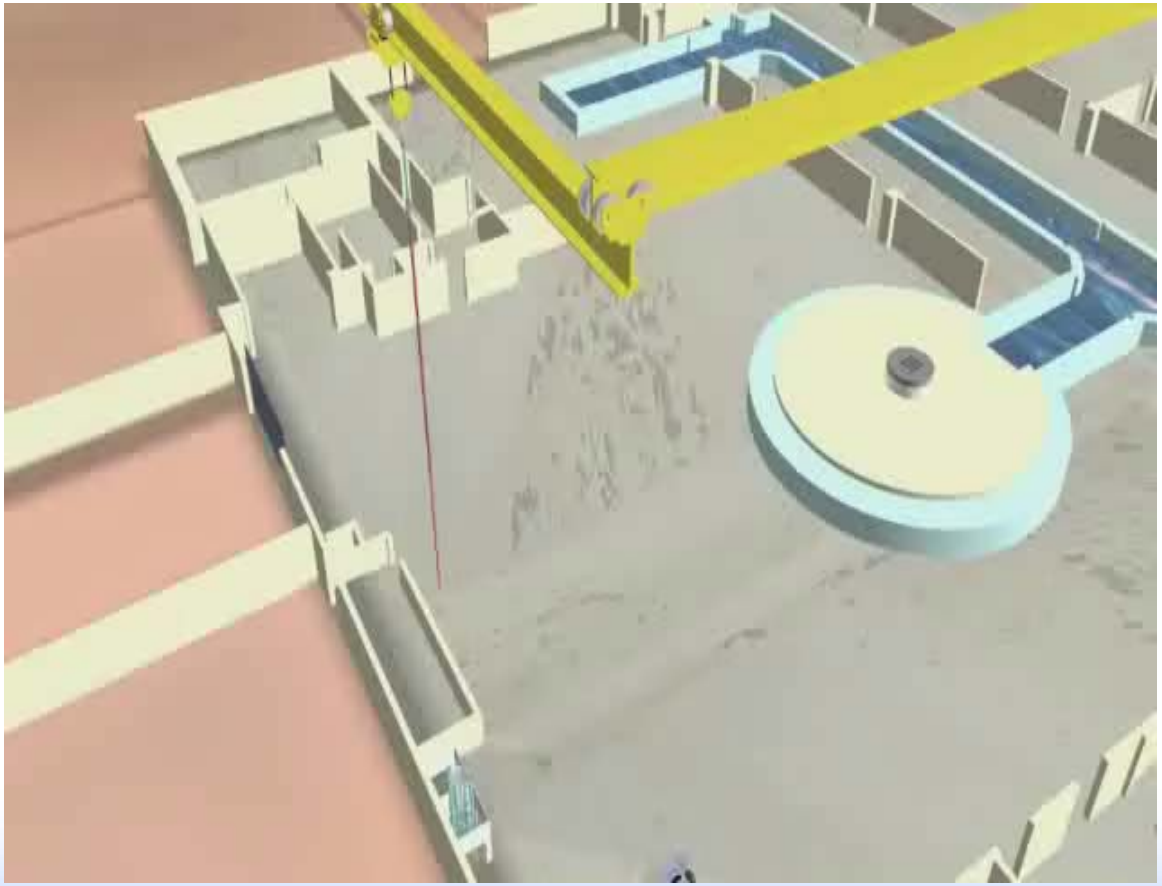

***(double click for video)***

# In-Pile Tube (IPT) & Test Train Interface

- IPT assembly is designed, analyzed, and fabricated to the "intent" of the ASME Section III Code.
- Insulating jacket insulates the loop coolant from reactor primary coolant
- Pressure tube is a long, narrow pressure vessel
- Flow tube directs and provides inlet/outlet flow paths within the IPT
    - Most loops have bottom to top flow
    - The NSUF center flux trap IPT has top to bottom flow, simply because this is a previously existing plumbing arrangement for a prior test

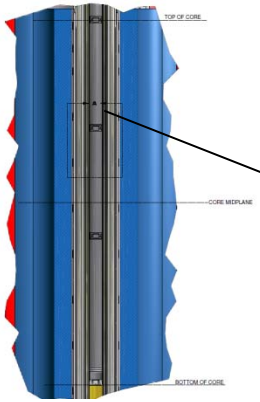


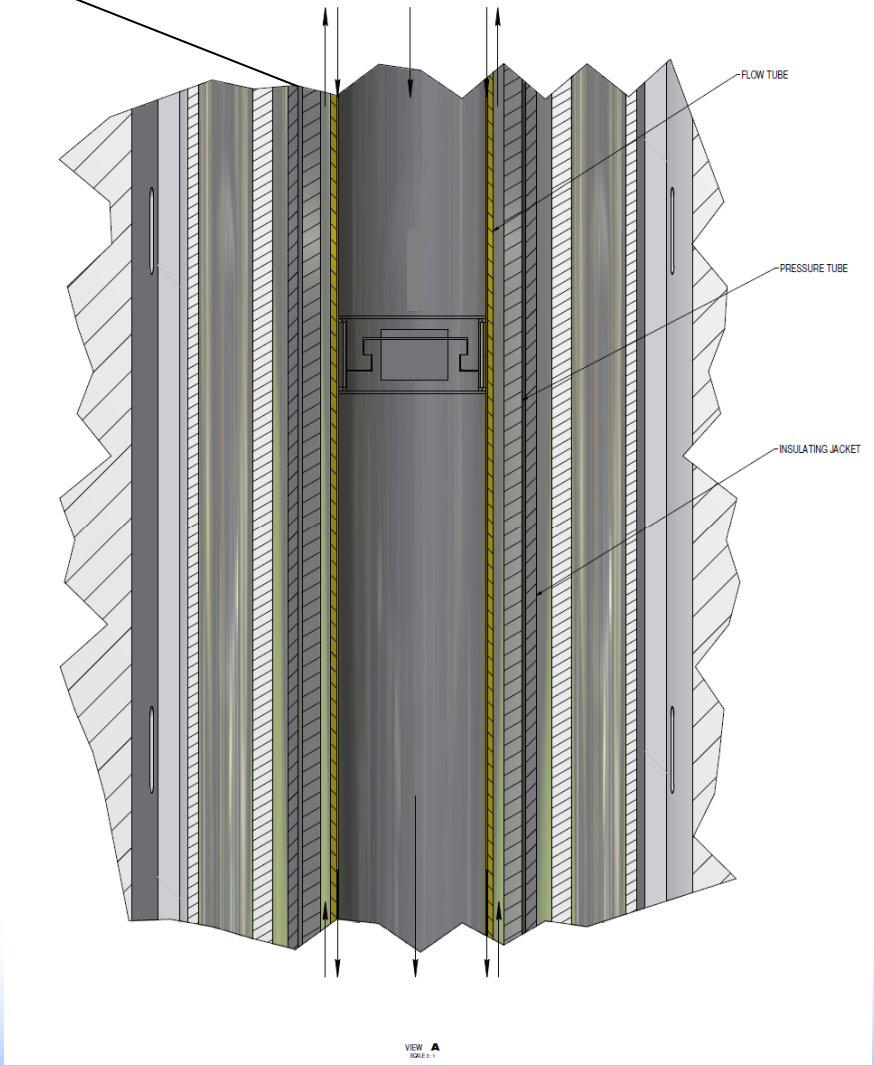


Idaho National Laboratory

# Test Train Components

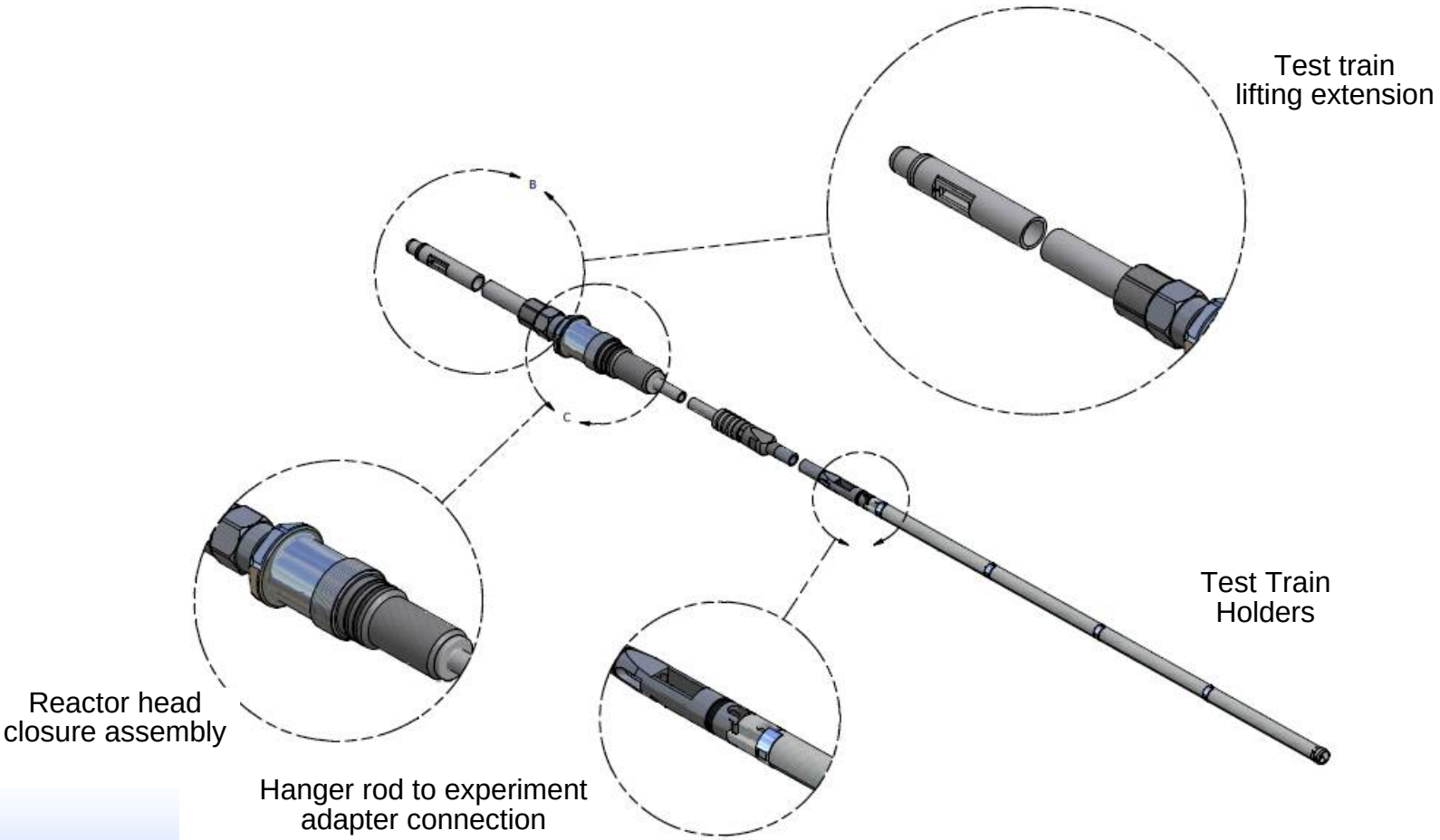

# Holder Placement

- It is anticipated that most experiments will require removal of the entire experiment train, consisting of:
  - Alternative, above core holder(s) (~16”)
  - In-core holders can vary in length by 4-inch increments up to two feet in order to provide an overall in-core length of 48 inches
  - Alternative, below core holder(s) (~16”)

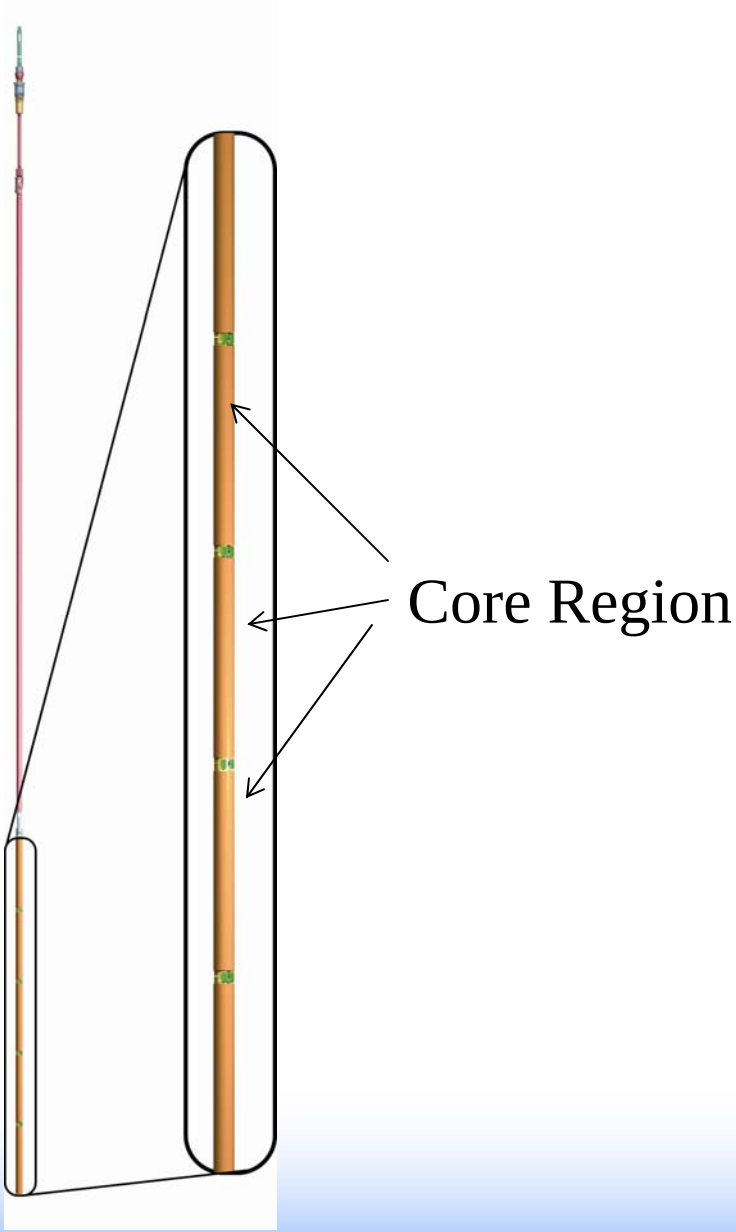

# Zr-4 Holders

- Zr-4 holders are held together by sliding end connections together
- A clip keeps the holders aligned

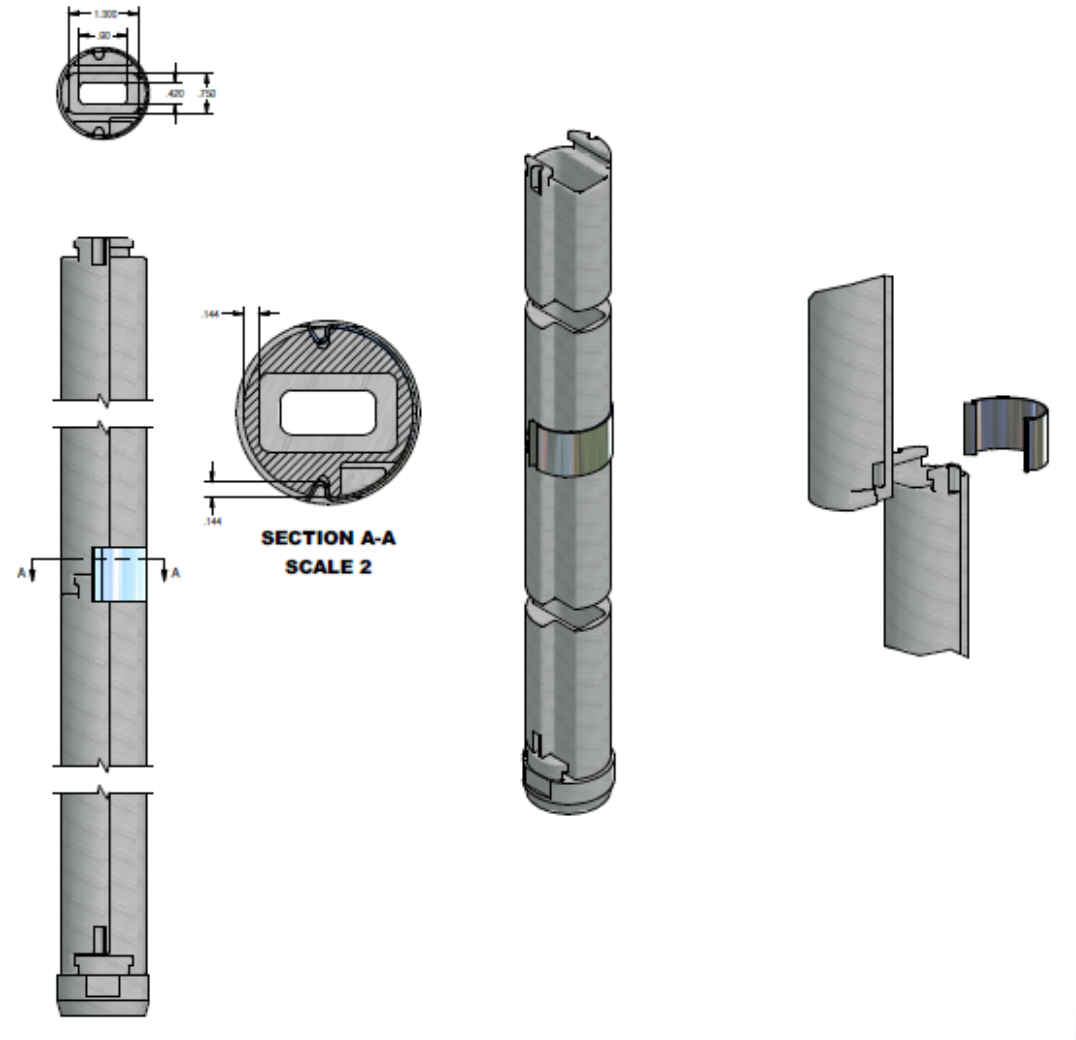

# Clip Removal

- During canal removal, one of the top holder clips is pulled off using a tool that is inserted into the clip
- The in-core test train, which is held by a bucket, is then taken to the canal working tray for reconfiguration or off-site shipment

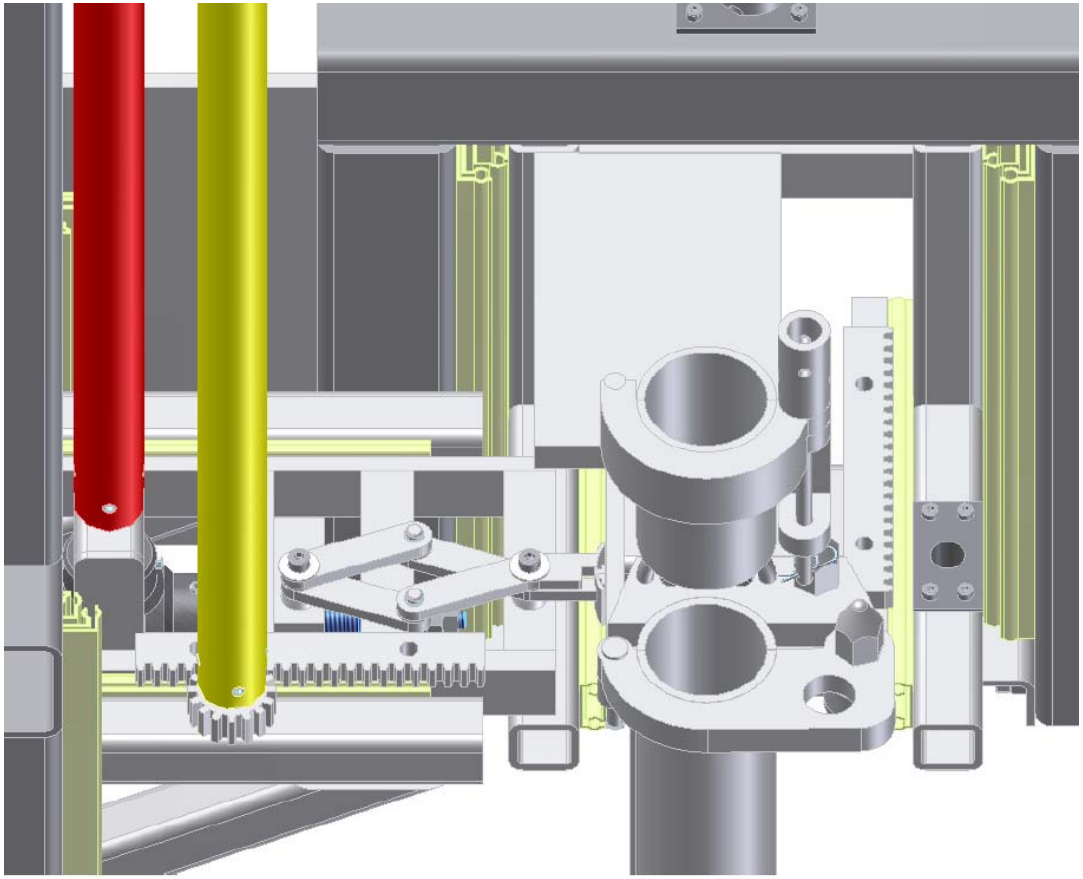

# Cask loading and Transportation

- Experiment holders will be loaded underwater in the ATR canal into the GE2000 or BRR cask, then transported to the MFC Hot Fuel Examination Facility
  - An insert fits within the cask
  - A basket with specimen containing holders fits within the insert
- Dry cell options will be considered in the future

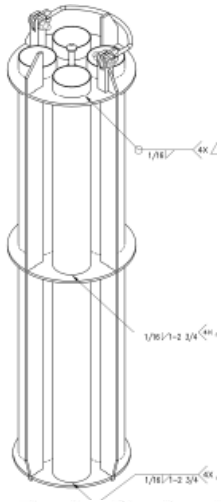

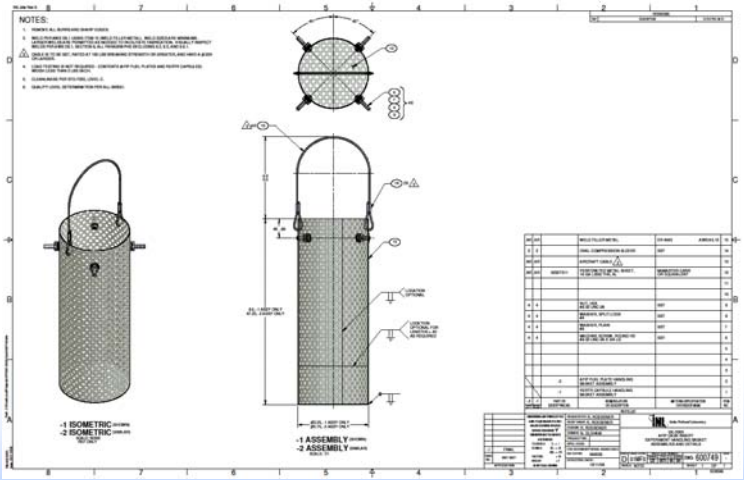

# EXPERIMENT EXAMPLES

# Example 1: 0.4 CT Specimens, X-750 and XM-19 Test Train Arrangement

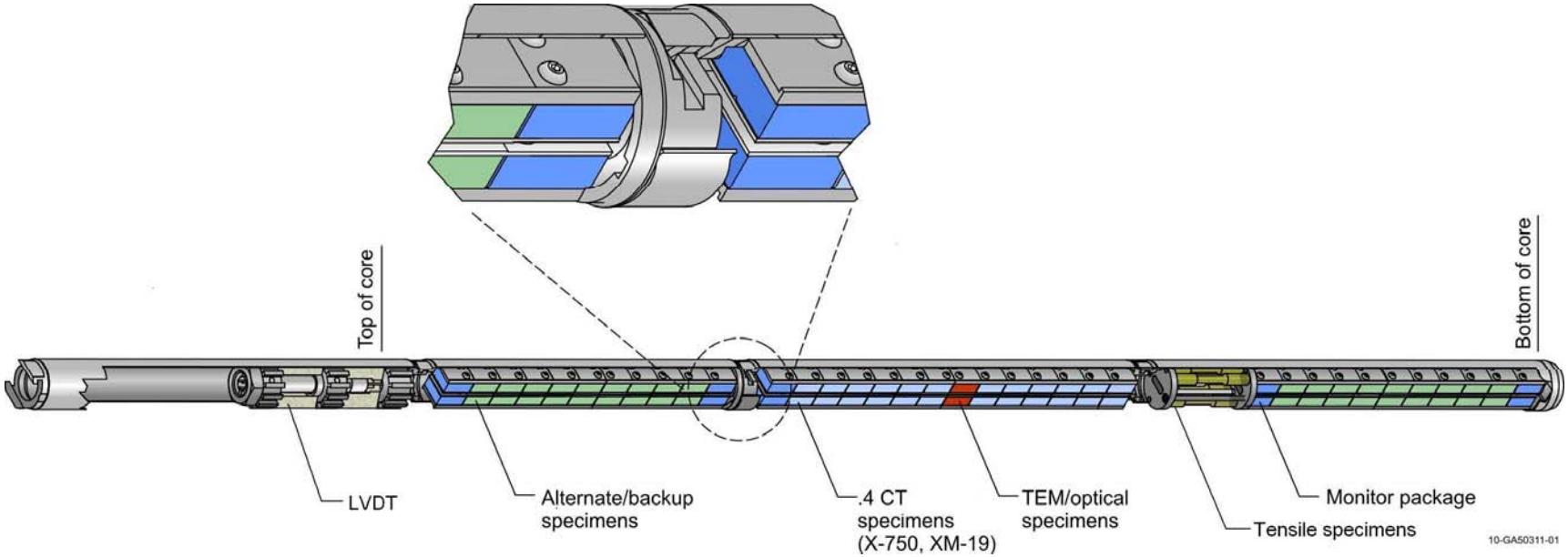

# Experiment Package Design

- 0.4 CT specimens are sandwiched between two stainless plates with approximately 0.020 gap/washer between specimens
  - If needed, Hf and other materials can be added for flux tailoring or for finer temperature control
- Tensile specimens are retained between vertical stainless plates
  - If needed, a sleeve is added to increase temperature

0.4 CT Specimen Package

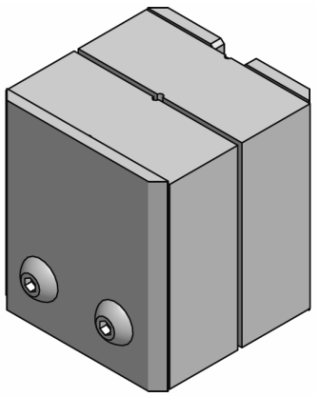

Tensile Package

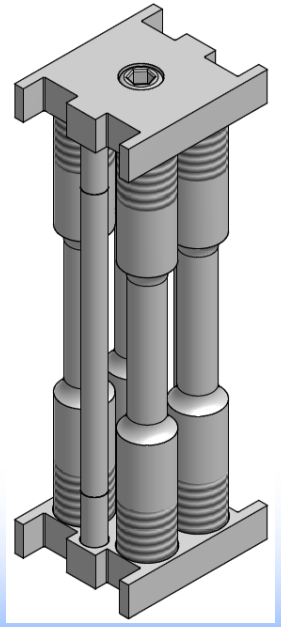

Idaho National Laboratory

# Test Train Instrument Concepts

- **LVDT (Linear Variable Differential Transformer) measures real time specimen growth or swelling**

- **Thermocouple inserted into experiment inlet region**

- **Static flux, temperature, and He accumulation monitors can be placed adjacent to specimens**

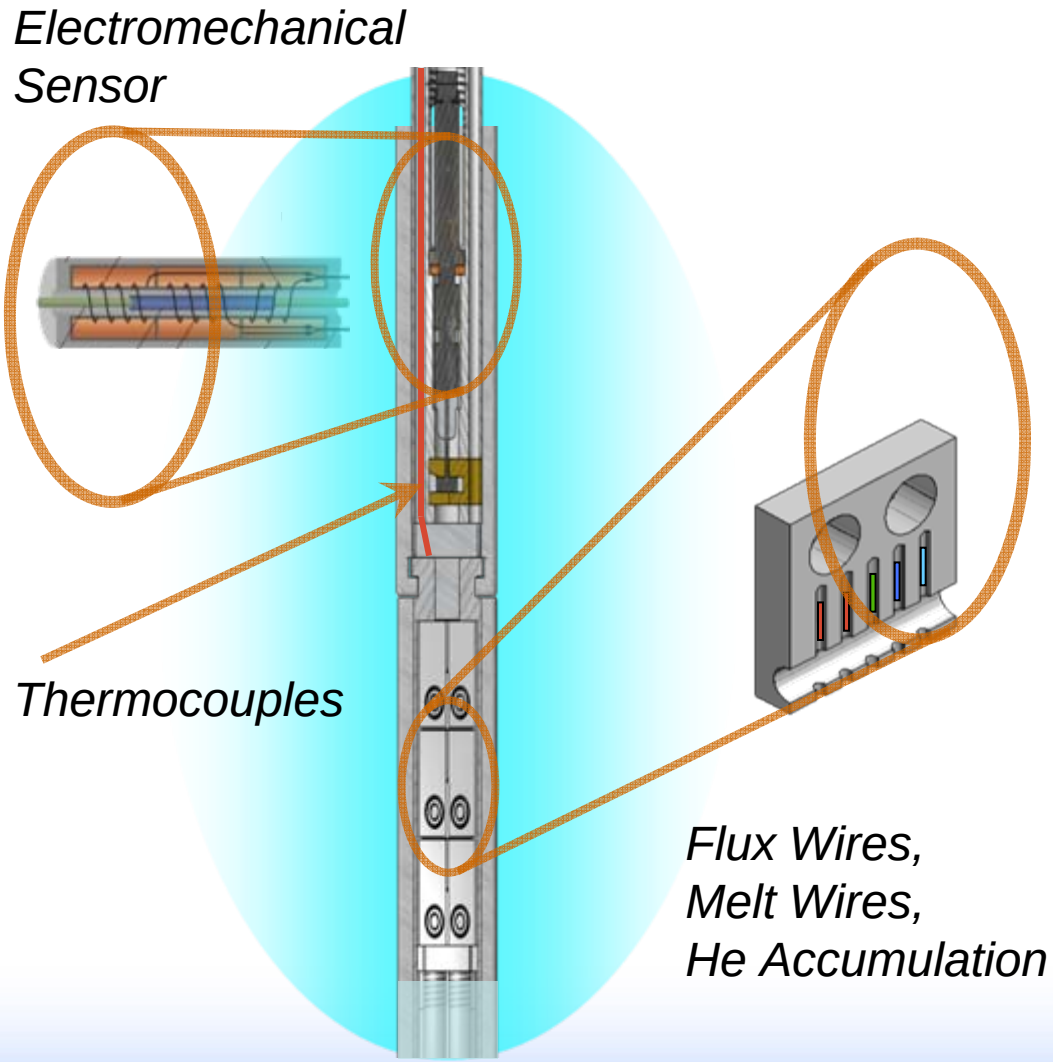

# TEM and Met Discs

- **Specimen sheets or pre-machined samples placed in sheets and sandwiched in package next to CT specimens**

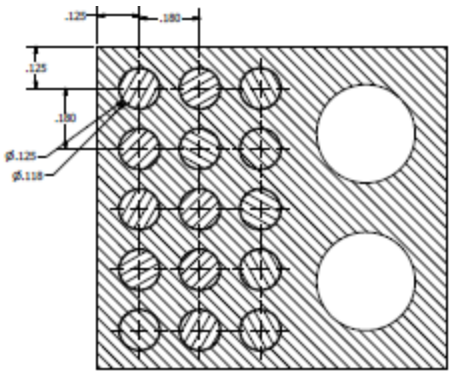


SECTION B-B
SCALE 5 : 1

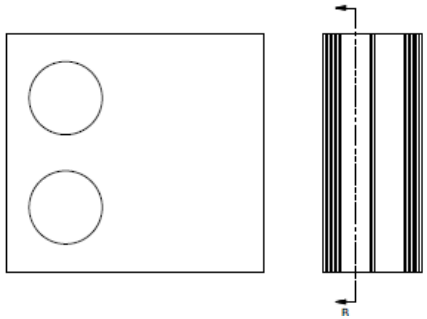

# Example 2: LWR Sustainability
# SiC Ceramic Clad Fuel

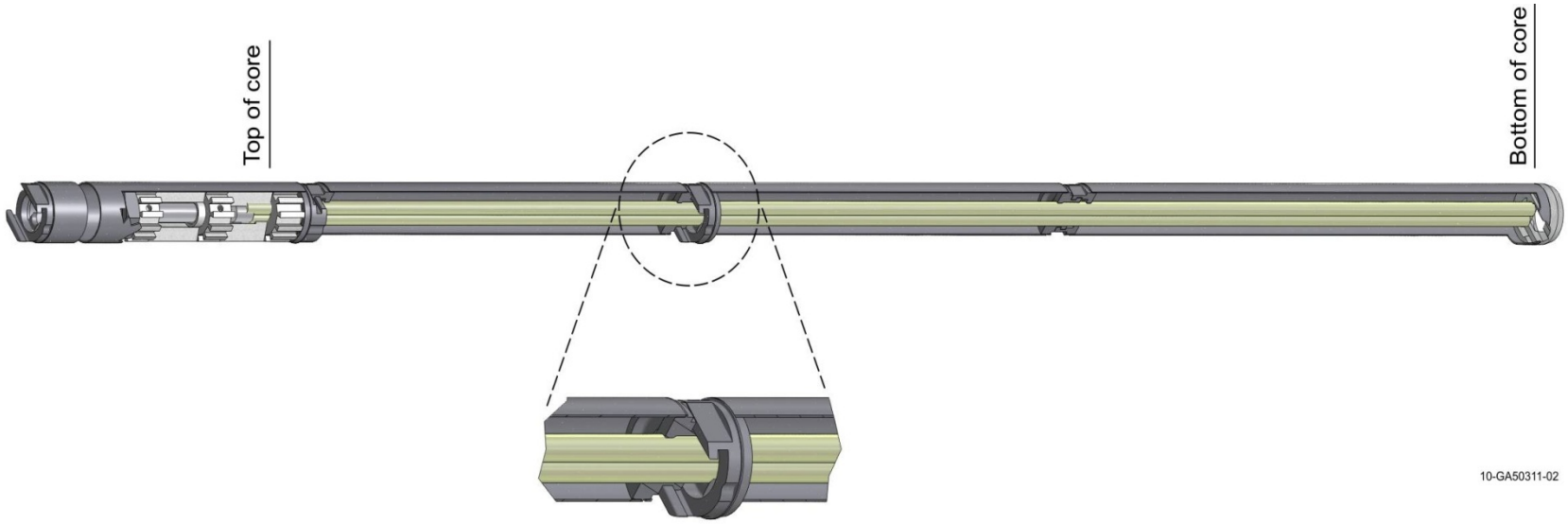

# LOOP CONTROLS & INSTRUMENTATION

# Loop 2A Upgrades*

- **Replaced Distributed Control System (DCS)**
- **Upgrading to provide monitoring and control (pressure, temperature, and flow)**
- **Planned: Data acquisition and monitoring with user internet access to unclassified data**
- **Screen example:**

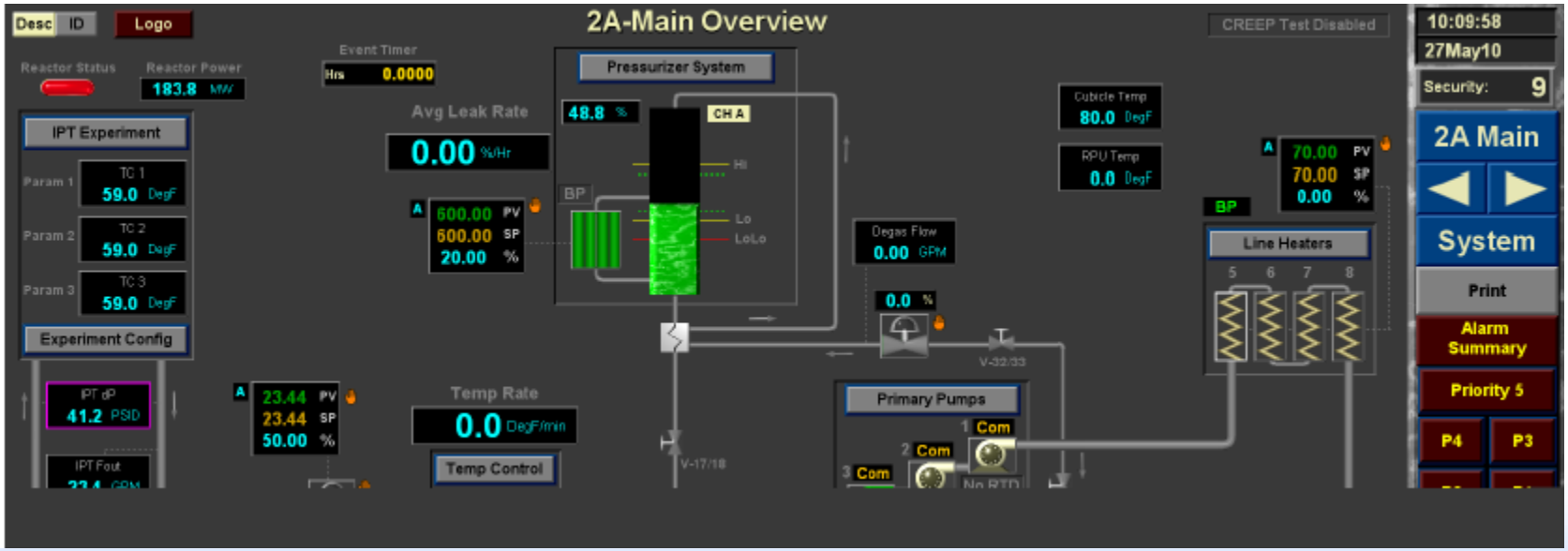


Idaho National Laboratory

* By ATR Design and Project Engineering

# Experiment Support

- **Planned:**
  - **Neutron flux monitoring instrumentation (SPND and fission chamber interfaces)**
  - **High temperature thermocouples and monitoring interfaces (including ice point reference)**
  - **Thermal conductivity instrumentation (constant current sources, power and thermocouple monitoring interfaces)**
  - **Creep test/material expansion instrumentation (high accuracy, in core qualified LVDT systems)**
- **Proposed:**
  - **Ultrasonic based sensor**
  - **Fission gas measurement**
  - **Radio frequency (RF) sensor support**
  - **Fiber optic sensor**
- **Most test train sensors will be supplied by user**

# Comments/Questions

- In-Pile Tube
- Test Train
  - Experiment Options
- Planned/Proposed Instrumentation and Controls