# Remote Output Feedback Stabilization for Fractional-Order Systems via Communication Networks

Xiaona Song, Ines Téjado, YangQuan Chen

Center for Self-Organizing and Intelligent Systems (CSOIS), USU

# Outline

- Ⅰ、Problem Formulation
- Ⅱ、Main Results
- A) Controllability
- B) Static output feedback control case
- C) Dynamic output feedback control case
- Ⅲ、Simulation
- Ⅳ、Conclusion

# I 、Problem Formulation

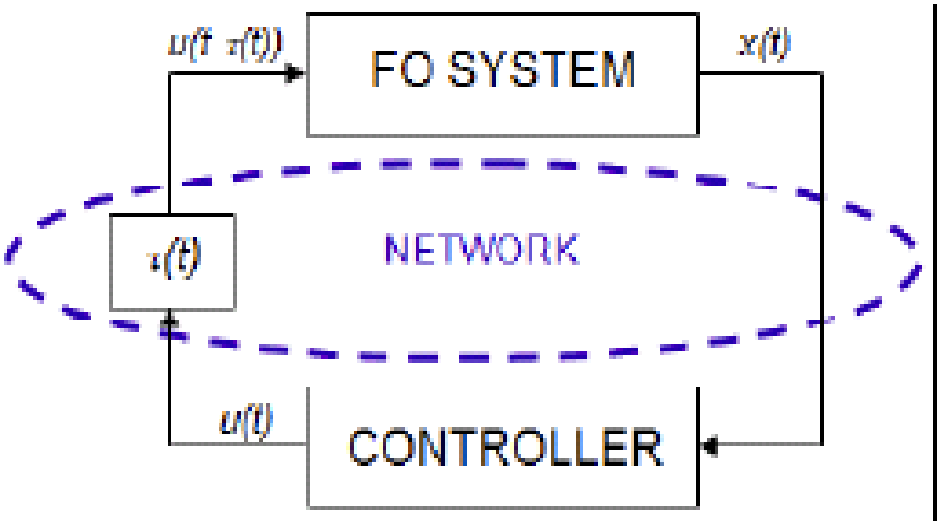


Fig. 1. System scheme of FO Networked Control System

- In this paper, we adopt the following Caputo definition for fractional derivative, which allows utilization of initial values of classical integer-order derivatives with known physical interpretations:

$$D^{\alpha} f(t) = \frac{d^{\alpha} f(t)}{dt^{\alpha}} = \frac{1}{\Gamma(n-\alpha)} \int_0^t \frac{f^{(n)}(\tau) d\tau}{(t-\tau)^{\alpha+1-n}},$$

Where $n$ is an integer satisfying $n-1 < \alpha \leq n$.

$$D^{\alpha}x(t) = Ax(t) + Bu(t-\tau(t)), x(0) = x_0, \quad (1)$$

$$\bar{y}(t) = Cx(t), \quad (2)$$

$$D^{\alpha}z(t) = f(z(t), u_d(t)), z(0) = z_0, \quad (3)$$

$$\tau(t) = h(z(t), u_d(t)), \quad (4)$$

where $\alpha$ is the fractional commensurate order. $x(t) \in R^n$ is the state, $u(t) \in R^m$ is the control input, $\bar{y}(t) \in R^s$ is the measured output. $A$, $B$ and $C$ are known real constant matrices with appropriate dimensions.

- *Remark* 1 : In this paper, we adopt FO system to represent the remote system. The main reason is that many real-world physical systems are well characterized by FO state equation. So, it will make sense to do the stability and control problem about this system.

- *Remark 2* : Network traffic has a multifractal nature or a nonuniform behavior according to reference. It can be viewed as being composed of heavy-tailed processes which collectively determine this behavior. Therefore, network time-delay can be modeled like a fractional Gaussian noise process with fractional lower-order statistics. Hence, here we consider the FO state space system to model the random delay of the networked control system.

- Before the Main results, we first give the definition of the Mittag-Leffler function, which will be used later.
- **Definition:**

It is a function defined by the following series

$$E_{\alpha}(z)=\sum_{k=0}^{\infty}\frac{z^{k}}{\Gamma(\alpha k+1)}$$

The more general definition of the Mittag-Leffler function in two parameters is as follows

$$E_{\alpha,\beta}(z)=\sum_{k=0}^{\infty}\frac{z^{k}}{\Gamma(\alpha k+\beta)}$$

# Ⅱ、Main Results

- A、Controllability

- Definition: The FO time-varying system (1) is said to be controllable on $[t_0,t_f]$ if and only if for any initial state $x(t_0)$ and final state $x(t_f)$, there exists a control function $u(t)$ defined on $[t_0,t_f]$ which can drive the initial state $x(t_0)$ to the final state $x(t_f)$.

- Now, we will show that the controllability condition of FO time-varying system (1) is the same as the one of the following system:

$$D^{\alpha}x(t) = Ax(t) + Bu(t).$$

See the paper Page 2 of our paper.

There exist several well-known stabilization methods for the FO system, we have discussed state feedback controller design problem for the FO system in another paper. So in this paper, we adopt the static and dynamic output feedback control methods, respectively.

- B1、Static Output Feedback Controller Design
- For the FO system (1) with time-varying delay in the control, we can obtain

$$x(t) = E_{\alpha,1}(At^{\alpha})x(t_0) + \int_{t_0}^{t} \theta^{\alpha-1} E_{\alpha,\alpha}(A\theta^{\alpha}) B\eta(t-\theta)d\theta.$$

Now let $H(t)$ satisfy the following equation, which has the same controllability condition of the system (1) :

$$\begin{aligned} D^{\alpha}H(t) &= AH(t) + Bu(t), \\ \hat{y}(t) &= CH(t) \end{aligned} \tag{5}$$

- then, from the above equation,

$$H(t) = E_{\alpha,1}(At^{\alpha})H(t_0) + \int_{t_0}^{t} \theta^{\alpha-1} E_{\alpha,\alpha}(A\theta^{\alpha}) Bu(t-\theta) d\theta.$$

assuming that the initial condition of $x(t)$ and $H(t)$ are the same:

$$H(t) = x(t) + \int_{t_0}^{t} \theta^{\alpha-1} E_{\alpha,\alpha}(A\theta^{\alpha}) B[u(t-\theta) - \eta(t-\theta)] d\theta. \tag{6}$$

Here, we set $t_0 = t - \tau_{\max}$ , and let the control law

$$u(t) = -K\hat{y}(t) = -KCH(t), \tag{7}$$

be a stabilizing control for the system (5).

Then $H(t) \to 0$, and from (6) and (7) we have

$$| x(t) | \leq | H(t) | + \tau_{\max} \times \max_{-\tau_{\max} \leq \theta \leq 0} \| \theta^{\alpha-1} E_{\alpha,\alpha}(A\theta^{\alpha}) \|$$
$$\times \| KCH(t) - KCH(t - \tau(t)) \| .$$

Finally, we can obtain

$$x(t) \to 0 \text{ as } H(t) \to 0 .$$

- So, the system (5) can be expressed as follows:

$$D^{\alpha} H(t) = (A - BKC)H(t). \tag{8}$$

Then, we can have the following stability result.

- B2、Stability Analysis

- Theorem 1 : The control law (7) applied to system (5) leads to the closed-loop form (8) with order $1 \leq \alpha < 2$. Then, if there exist the nonsingular matrix $N$, and symmetric matrix $P > 0$, the following conditions are satisfied :

$$\begin{bmatrix} \vec{A}\sin\theta & \star \\ \mathring{A}\cos\theta & \vec{A}\sin\theta \end{bmatrix} < 0, \tag{9}$$

- and the following equation constraint satisfied

$$MC = CP, \tag{10}$$

where

$$\begin{aligned}
\theta &= \pi - \frac{\alpha\pi}{2}, \\
\bar{A} &= AP - BNC + PA^T - PC^T N^T B^T, \\
\hat{A} &= PA^T - C^T N^T B^T - AP + BNC,
\end{aligned}$$

then, the state $x(t)$ is stable. Furthermore if (9) and (10) are feasible, then a static output feedback controller is given by $K = NM^{-1}$.

The Proof for this Theorem can be found in Page 3 of our paper.

- Theorem 2 : The control law (7) applied to system (5) leads to the closed-loop form (8) with order $0 < \alpha < 1$. Then, if there exist the matrices $Q > 0$ and $N$, the following conditions is satisfied

$$\begin{aligned} (AQ - BNC + QA^T - C^T N^T B^T)\cos\psi < 0, \\ MC = CQ, \end{aligned} \tag{11}$$

where

$$\Psi = (1-\alpha)\frac{\pi}{2}.$$

then, the state $x(t)$ is stable. Furthermore if (11) is feasible, then a static output feedback controller is given by $K = NM^{-1}$.

The Proof can be found in the paper of Page 3 and 4.

# C1、Dynamic Output Feedback Controller Design

- Let $W(t)$ satisfy the following equation, which has the same controllability condition of the system (1)

$$\begin{aligned} D^{\alpha}W(t) &= AW(t) + Bu(t), \\ y_w(t) &= CW(t), \end{aligned} \tag{12}$$

Now, we consider the following dynamic output feedback controller for the system (12):

$$\begin{aligned} D^{\alpha}\hat{W}(t) &= A_k\hat{W}(t) + B_k y_w(t), \\ u(t) &= C_k\hat{W}(t), \end{aligned} \tag{13}$$

where $\hat{W}(t)$ is the controller state; $A_k$, $B_k$, $C_k$ are matrices to be determined later. Then, the closed-loop system can be obtained as:

$$D^{\alpha}e(t) = \begin{bmatrix} A & BC_k \\ B_kC & A_k \end{bmatrix} e(t) = \hat{A}_k e(t),$$

where

$$e(t) = \begin{bmatrix} W(t) \\ \hat{W}(t) \end{bmatrix}, \hat{A}_k = \begin{bmatrix} A & BC_k \\ B_kC & A_k \end{bmatrix}.$$

Then, we can have the following stability result.

- C2、 Stability Analysis

- Theorem 3 : The control law (13) applied to system (12) leads to the closed-loop form with order $1 \leq \alpha < 2$. Then, if there exist the symmetric matrices $X > 0$ and $Y > 0$, the following conditions are satisfied :

$$\begin{bmatrix} (\Gamma_1 + \Gamma_1^T)\sin\theta & \star \\ (-\Gamma_1 + \Gamma_1^T)\cos\theta & (\Gamma_1 + \Gamma_1^T)\sin\theta \end{bmatrix} < 0,$$

and

$$Y_x = \begin{bmatrix} -Y & -I \\ -I & -X \end{bmatrix} < 0,$$

where

$$\Gamma_1 = \begin{bmatrix} YA + \Phi C & \Omega \\ A & AX + B\Psi \end{bmatrix}.$$

- Furthermore a desired dynamic output feedback controller is given in the form of (13) with parameters as follows

$$\begin{aligned} A_k &= W^{-1}(\Omega - YAX - \Phi CX - YB\Psi)S^{-T}, \\ B_k &= W^{-1}\Phi,\ C_k = \Psi S^{-T}, \end{aligned} \tag{14}$$

where *S* and *W* are any nonsingular matrices satisfying

$$SW^T = I - XY. \tag{15}$$

The Proof for this Theorem can be found in Page 4 of our paper.

- Theorem 4 : The control law (13) applied to system (12) leads to the closed-loop form with order $0 < \alpha < 1$. Then, if there exist the matrices $\Omega$, $\Psi$, $\Phi$, and symmetric matrix $X > 0$ and $Y > 0$, the following conditions are satisfied

$$\begin{aligned} \cos\frac{(1-\alpha)\pi}{2} sym\Gamma_1 &< 0, \\ Y_x &< 0, \end{aligned}$$

Furthermore a desired dynamic output feedback controller is given in the form of (13) with parameters as in (14), where $S$ and $W$ are any nonsingular matrices satisfying (15).

The Proof can be found in the paper of Page 4 and 5.

# III、Simulation

- *Example* 1: Static output feedback control case:
- We consider the FO system (1)-(2) of order 0<α<2 with scalar parameters as follows:

$$\begin{aligned} D^{\alpha}x(t) &= ax(t) + bu(t-\tau(t)), \\ y(t) &= cx(t), \;\; x(0) = x_0, \end{aligned} \tag{16}$$

where $a = 0.01$, $b = 0.2$, $c = -1$ . On the other hand, the dynamics of the time-delay is given by the following equation:

$$D^{\beta}\tau(t) = l\tau(t) + B(t) + \tau_0,$$

where B(t) is a white noise, and $\tau_0 = 0.9$, $l = 0.1$ are given, and the initial condition is 0.1. $\beta$ is the time fractional-order, and is also given for different cases. The time-varying delay is shown in Fig. 2 for $\beta = 0.5$.

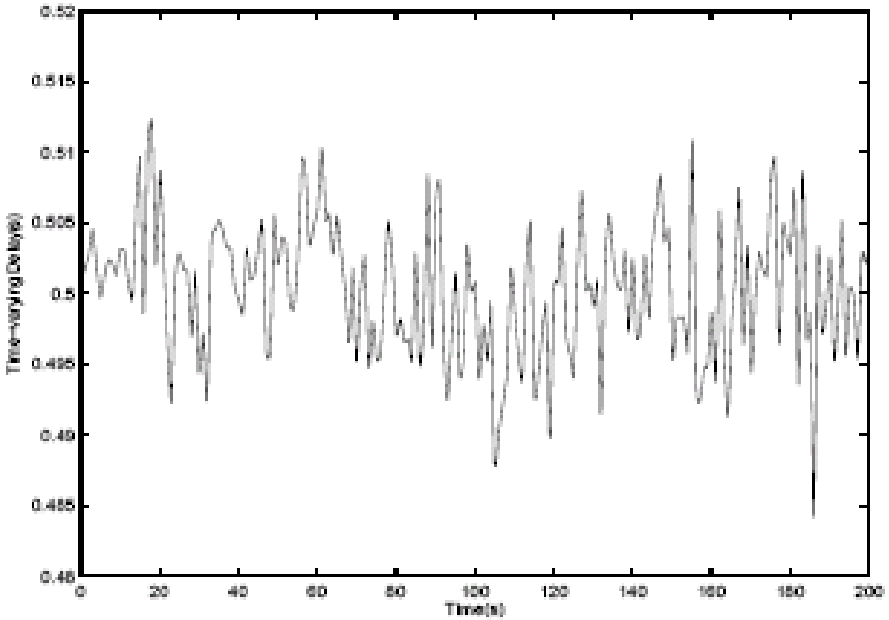


Fig. 2. Time-varying Delay

- The system is simulated in continuous-time and the static output feedback control is also implemented in the continuous form and the final control law can be obtained easily.

- Then, we use the designed controller with the parameter $K$ obtained form the equality constraint LMI in Theorem 1 or 2 by using Matlab LMI Toolbox to control the system (16), the resulting system response $x(t)$ are presented. Considering different orders $\alpha$, Fig. 3 and 4 show the system response $x(t)$ for $1 \leq \alpha < 2$ and $0 < \alpha < 1$, respectively. As we can see from them, the system response is faster for values of $\alpha$near to 1.

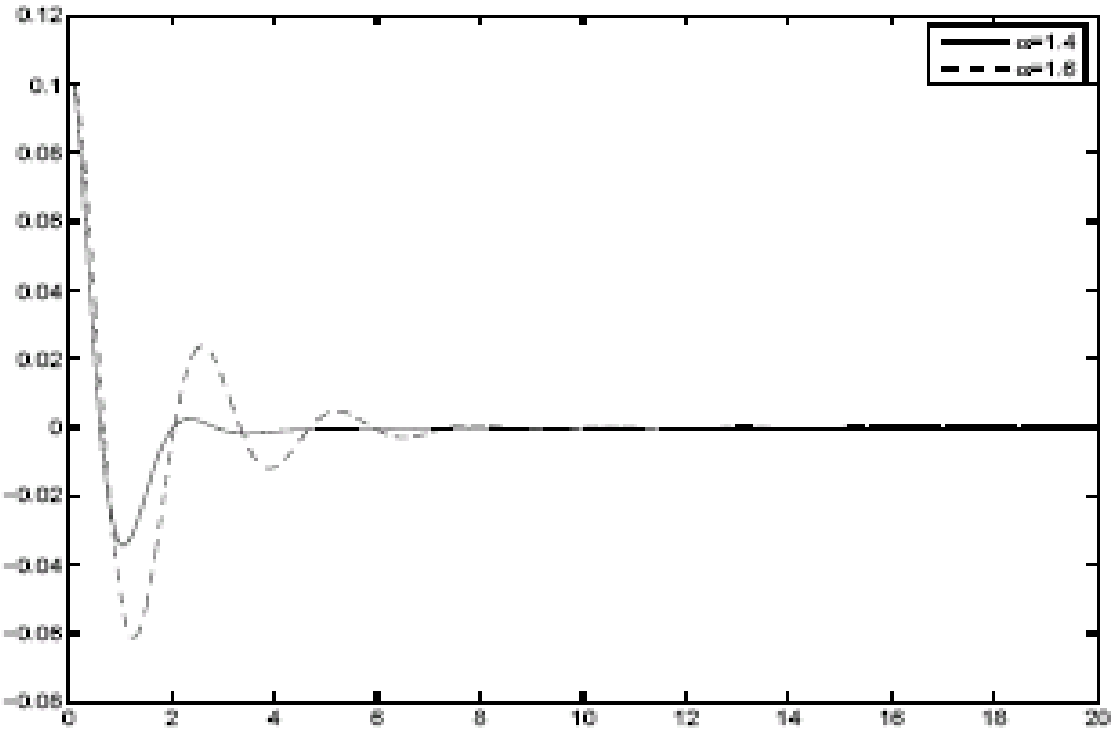


Fig. 3. Example 1: State response of $x(t)$ $(1 \leq \alpha < 2,\ \beta = 0.5)$

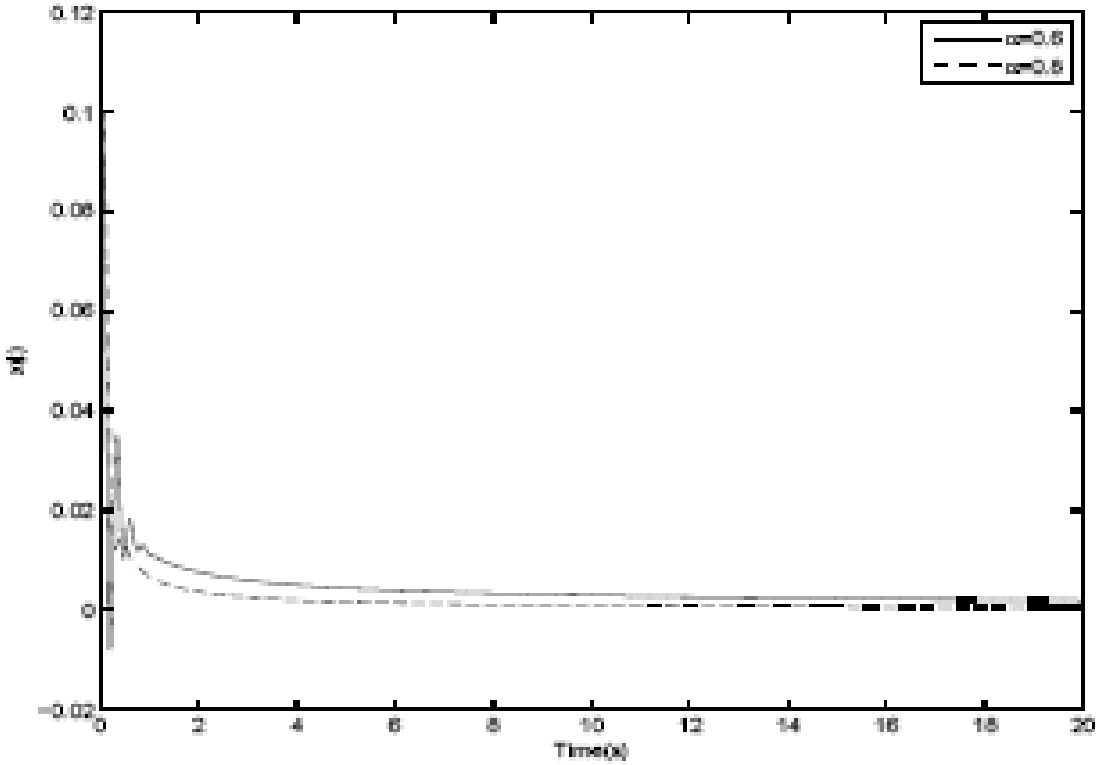


Fig. 4. Example 1: State response of $x(t)$ $(0 < \alpha < 1,\ \beta = 0.5)$

- *Example* 2: Dynamic output feedback control case:
- We consider the FO system (1)-(2) of order 0<α<2 with the parameters as follows:

$$A = \begin{bmatrix} 0.5 & 1 \\ 0.2 & 0.5 \end{bmatrix}, \; B = \begin{bmatrix} 1.5 & 0 \\ 0 & 1.1 \end{bmatrix}, \; C = \begin{bmatrix} 1 & 0 \\ 2 & 1 \end{bmatrix}.$$

On the other hand, the dynamics of the time-delay is given by the following equation:

$$D^{\beta}\tau(t) = l\tau(t) + B(t) + \tau_0,$$

where B(t) is a white noise, and $\tau_0 = 0.1$, $l = 0.1$ are given, and the initial condition is 0.1. Then we use the designed controller with the parameters in (13) obtained from the LMI in Theorem 3 and 4 by using Matlab to control the system (1)-(2) with the parameters above.

The resulting system response $x(t)$ are presented. Considering different orders α, Fig. 5 shows the system response of $x1(t)$ for $1 \leq \alpha < 2$ and Fig. 6 depicts the system response of $x2(t)$ for $0 < \alpha < 1$, respectively. As we can see from them, the system response is faster for values of αnear to 1.

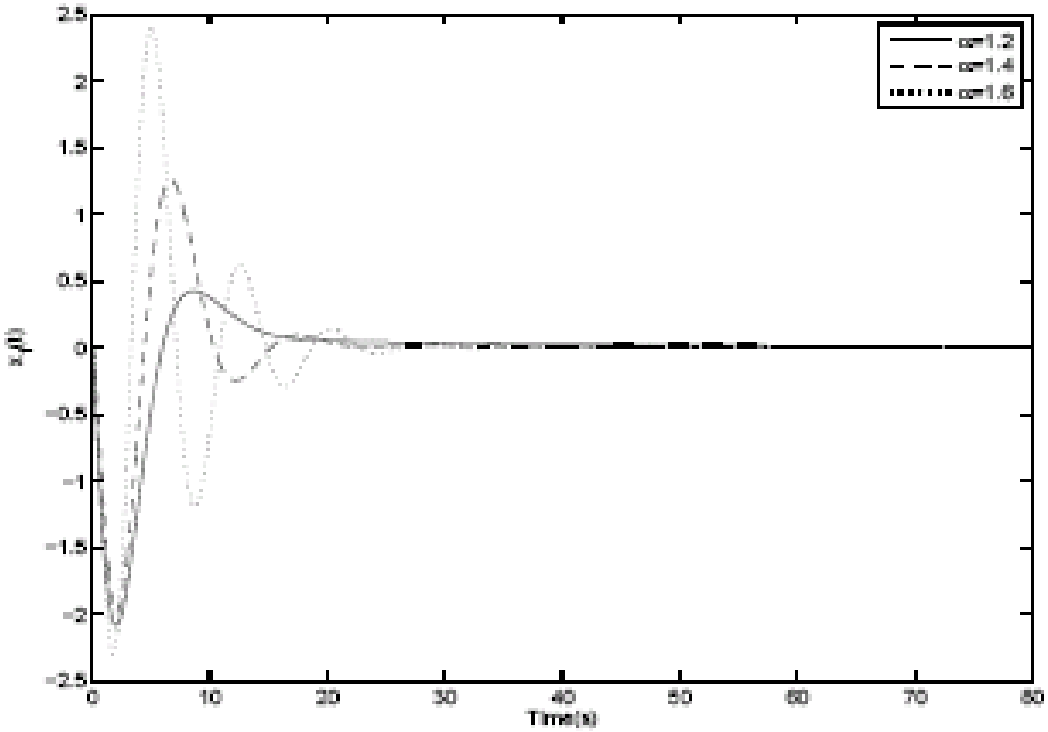


Fig. 5. Example 2: State response of $x_1(t)$ $(1 \leq \alpha < 2,\ \beta = 0.5)$

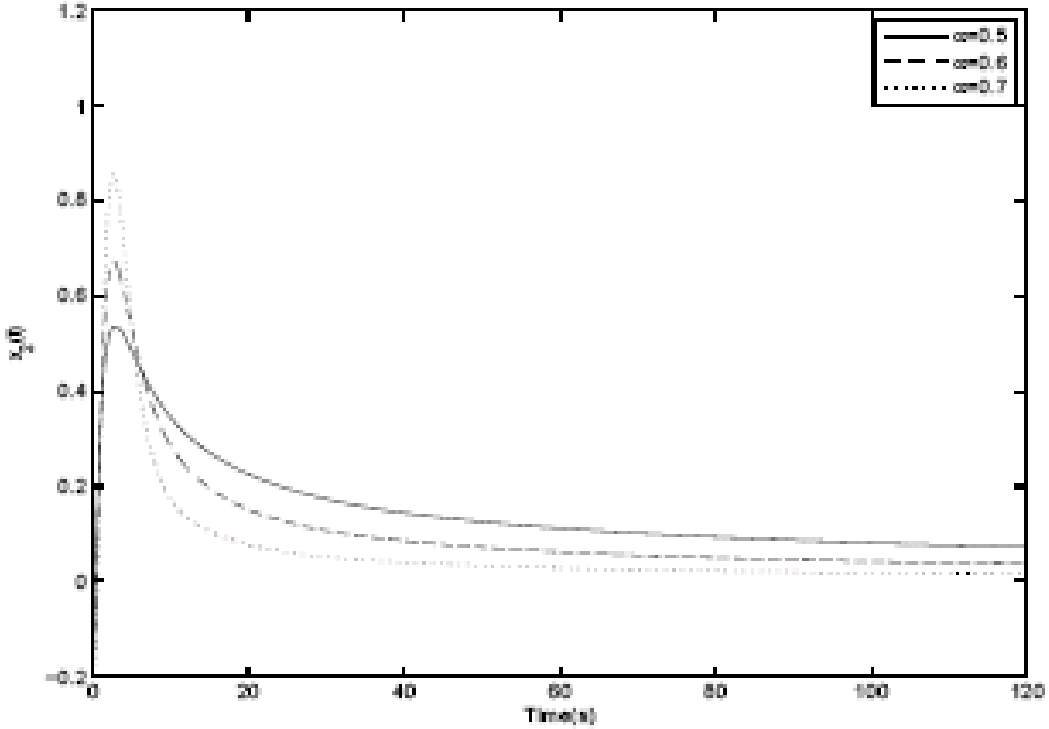


Fig. 6. Example 2: State response of $x_2(t)$ $(0 < \alpha < 1,\ \beta = 0.5)$

# IV、Conclusion

- The problem of remote output feedback stabilization for fractional-order systems with input time-varying delay of $0 < \alpha < 2$ via communication networks has been investigated.
- This problem leads to the problem of stabilizing an open-loop unstable FO system with time-varying delay.

- We use the receding horizon method to design static and dynamic output feedback control law which explicitly takes into account an estimation of the delay dynamics that sets the poles of the closed-loop system.

- Finally, we have presented some simulations showing the effectiveness of the proposed controller to stabilize a FO system with input time-varying delays when the delay is estimated.

# *Thanks for your attention*

Questions ?