A Measure of Observability for Multiconverter Shipboard Power Systems

Juan C. Jimenez, Chris J. Dafis, Karen Miu and Chika O. Nwankpa
Center for Electric Power Engineering (CEPE), ECE Department
Drexel University – Philadelphia, PA, USA

4th International Symposium on Resilient Control Systems
August 9 - 11
Boise, ID, USA

Presentation Outline

1. Introduction and Motivations
2. Problem Statement
3. Nonlinear Observability Formulation
4. Model Development
5. Conclusions

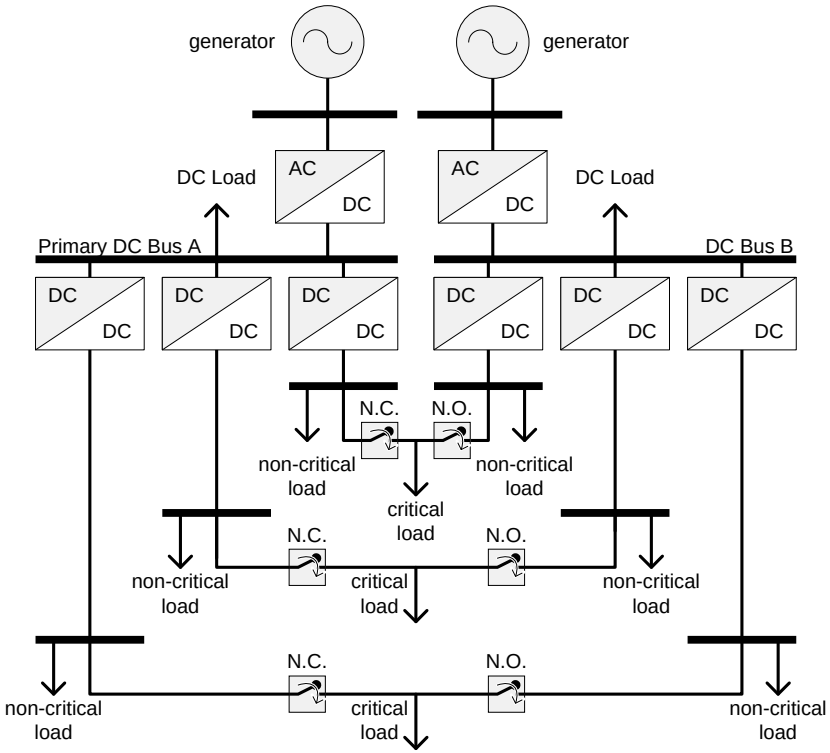

Figure 1: Portrayal of a shipboard power systems

Introduction

- *Inherent cross-regulation behavior* is expected due to the propagation of power electronic switching converters in the composition of power systems architectures
  - Converter controllers are built to be local
  - No consideration of coupling dependencies with other parts of the system

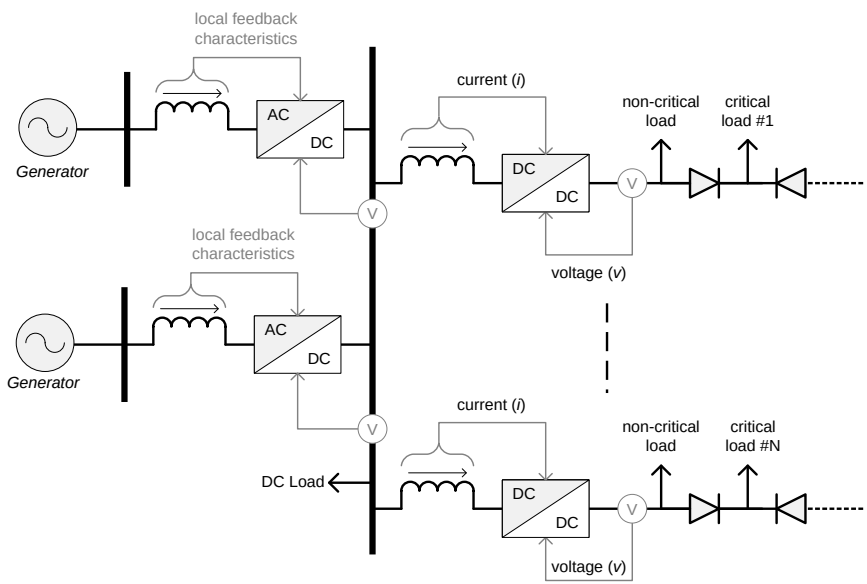

Figure 2: Shipboard power system figure showcasing converters interrelationship

Motivations

- Shipboard Power Systems
  - All electric ship vision
    - Electric drive
    - Integrated Power Systems
    - Zonal Distribution Systems
  - Crew force optimization trend
    - Cost reductions enabled by autonomous operation with reduced crew
- Enabling Technology – System Automation
  - Traditional control strategies are based on linearized power system models which are not *sufficient* due to *large system perturbations*
    - Pulse-power loads
    - Nonlinear interactions between system components
- A *measure of observability* of such systems will allow one to quantify their operational performance
  - Incorporation of nonlinear dynamics of converters and electromechanical behavior of generators and loads

Specific Problem Statement

- What is being sensed, *observed*, controlled? Effects?
- Observability issues in shipboard power systems
  - System model
  - Declaring observability
  - How to *quantify* observability?
    - Static case where observabilty measure is monitored as the system approaches the maximum loading point

Observability Formulation

- The general model used to investigate power system dynamics is that of the Differential Algebraic Equations (DAE) type in (1)

$$\begin{aligned} \dot{x} &= f(x,u,N) \\ 0 &= g(x,u,N) \\ p &= h(x,N) \end{aligned} \quad (1) \quad \longrightarrow \quad \begin{aligned} F(\dot{x},x,N) &= u \\ p &= h(x,N) \end{aligned} \quad (2)$$

- f - set of non-linear differential equations - model dependent
- g - non-linear algebraic equations
- x - is the set of dynamic state variables and the set of static variables
- u - independent control parameters
- N - network parameters
- h - set of nonlinear algebraic equations related to measurements
- p - measurement vector

Observability Formulation (cont.)

- A more generalized form of F(.) is given by

$$F(\dot{x}, x, N) - u = 0 \equiv G\left(\dot{x}, x, u, N\right) = 0 \qquad (3)$$

- If we let indices *s* and *r* be the differentiation indices for the system (*F*) and observation (*p*) equations respectively, then

$$\tilde{F}_s = \begin{bmatrix} F(\dot{x}, x, N) \\ F_x(\dot{x}, x, N)\dot{x} + F_{\dot{x}}(\dot{x}, x, N)\ddot{x} \\ \vdots \\ \left(F(\dot{x}, x, N)\right)^{(s)} \end{bmatrix} = \begin{bmatrix} u \\ u^{(1)} \\ \vdots \\ u^{(s)} \end{bmatrix} \qquad (4)$$

$$H = \begin{bmatrix} h(x, N) \\ h_x(\dot{x}, x, N)\dot{x} \\ \vdots \\ h(x, N)^{(r)} \end{bmatrix} = \begin{bmatrix} p \\ \dot{p} \\ \vdots \\ p^{(r)} \end{bmatrix} \qquad (5)$$

Observability Formulation (cont.)

- The observability formulation derived from the generalized form of (2) is given in terms of the Jacobian:

$$J_O = \begin{bmatrix} G_x & G_{\dot{x}} & G_w \\ H_x & H_{\dot{x}} & H_w \end{bmatrix} \tag{6}$$

$$w = [\ddot{x}, \dddot{x} \cdots x^{(\sigma)}] \quad \sigma = \max(r, s+1) \tag{7}$$

- The system is observable if the following two conditions hold:

$$\begin{aligned} &1: rank(J_O) = n + rank \begin{bmatrix} G_{\dot{x}} & G_w \\ H_{\dot{x}} & H_w \end{bmatrix} \\ &2: rank(J_O) \text{ is constant rank on S} \end{aligned} \tag{8}$$

Observability Metric

- The condition number of the observability Jacobian is the metric used and it is defined as:

$$\eta = \frac{\lambda_{\max}\left(J_O\right)}{\lambda_{\min}\left(J_O\right)} \tag{9}$$

where □are the singular values obtained from a singular value decomposition of the observability Jacobian

- The condition number is monitored along a given system load profile
  - Smallest □value indicates stronger observability (J_o is further from being singular)
  - As □increases the matrix is becoming ill-conditioned (system is less observable)

Model Development for the Shipboard Power System

- If the dynamic of interest are the *electromechanical* characteristics of generators and loads, the DAE model of the system is given by the following

$$\dot{\omega}_{G_1} = \frac{1}{M_{G_1}}\left(P_{M_1} - D_1\omega_{G_1} - P_{e1}\left(V_1, I_1^{AC}\right)\right)$$

$$\dot{\omega}_{G_2} = \frac{1}{M_{G_2}}\left(P_{M_2} - D_2\omega_{G_2} - P_{e2}\left(V_2, I_2^{AC}\right)\right)$$

$$\dot{\omega}_{PM} = \frac{1}{M_{PM}}\left(-P_{PM} - D_{PM}\omega_{PM} + P_{e4}\left(V_4, I_4^{AC}\right)\right)$$

$$\dot{\omega}_{pump} = \frac{1}{M_{pump}}\left(-P_{pump} - D_{pump}\omega_{pump} + P_{e6}\left(V_6, I_P\right)\right)$$

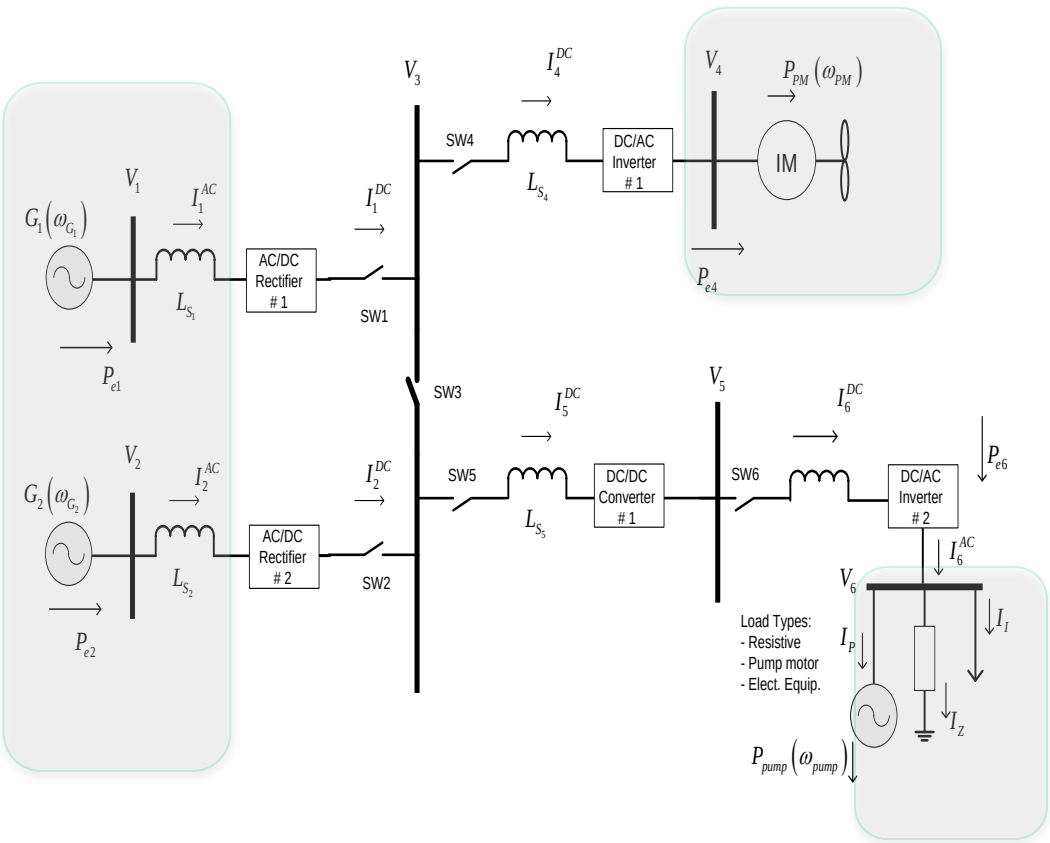

$$I_1^{DC} = \frac{k_1}{\omega L_{s1}}\left(\frac{3\sqrt{2}}{\pi}V_1\cos\alpha - V_3\right)$$

$$I_2^{DC} = \frac{k_2}{\omega L_{s2}}\left(\frac{3\sqrt{2}}{\pi}V_2\cos\alpha - V_3\right)$$

$$I_4^{DC} = \frac{k_4}{\omega L_{s4}}\left(V_3 - m_1 V_4\right)$$

$$I_5^{DC} = \frac{k_2}{X_{L_{s5}}}\left(V_5 - m_2 V_6\right)$$

Figure 3: Multiconverter shipboard power system

Equipment Representation: Dynamic or Static?

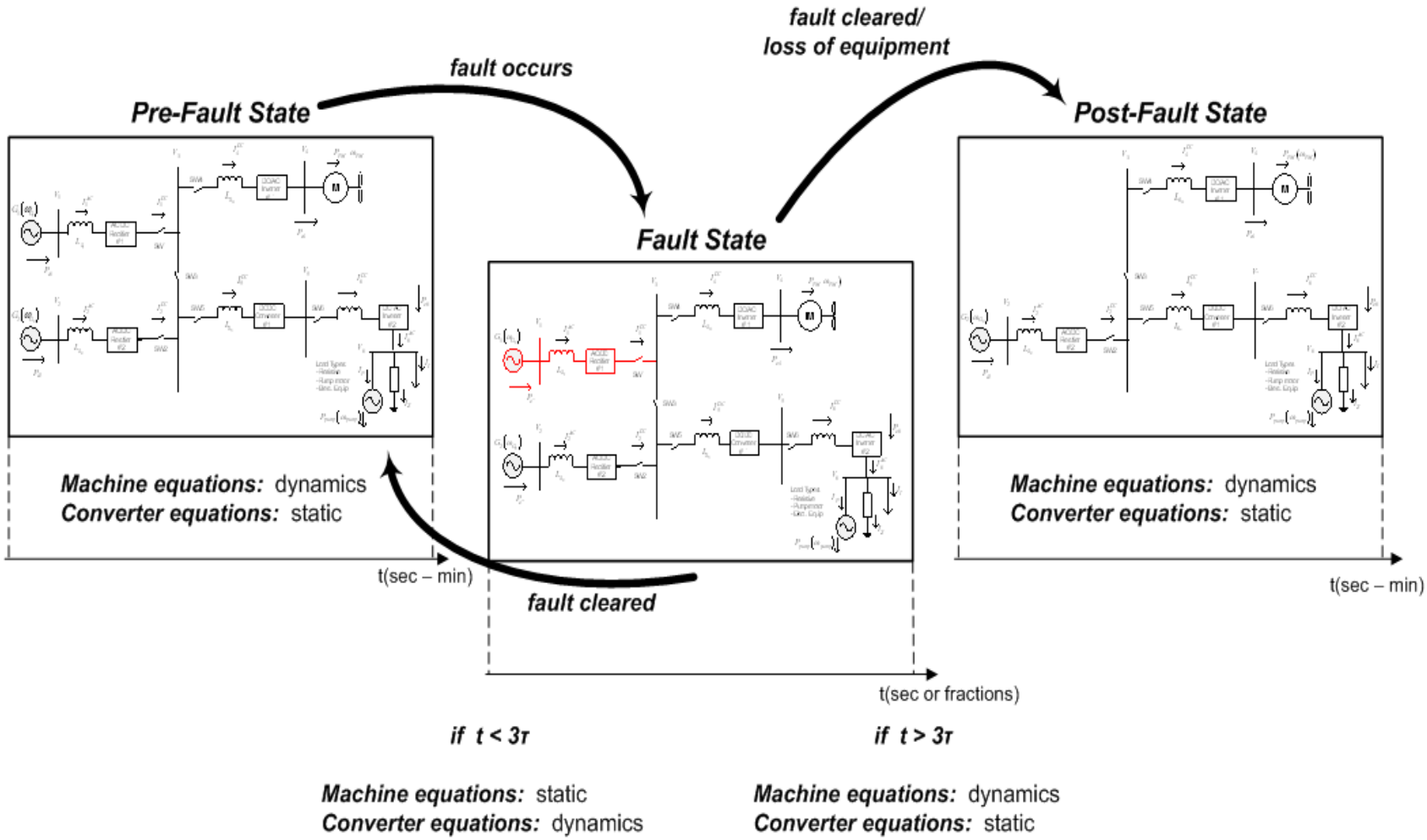

Figure 4: System state transitions due to a perturbation

Observability Formulation: Example

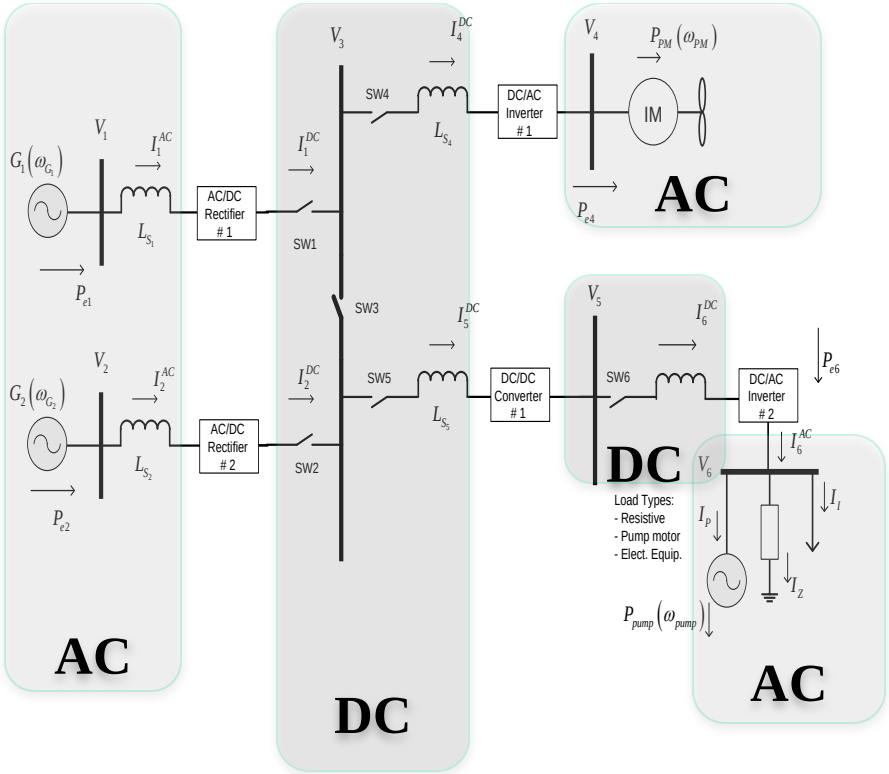

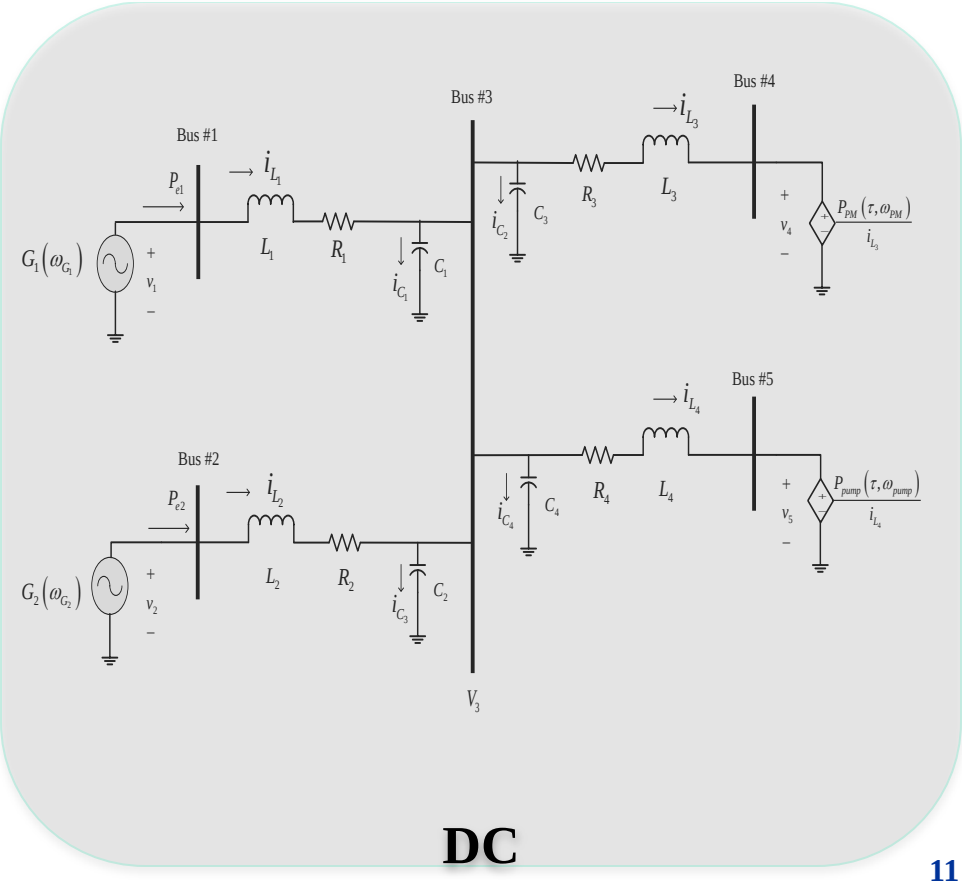

Observability Formulation (cont.)

- In a faulted state, converter dynamics are of interest and the DAE model is given by

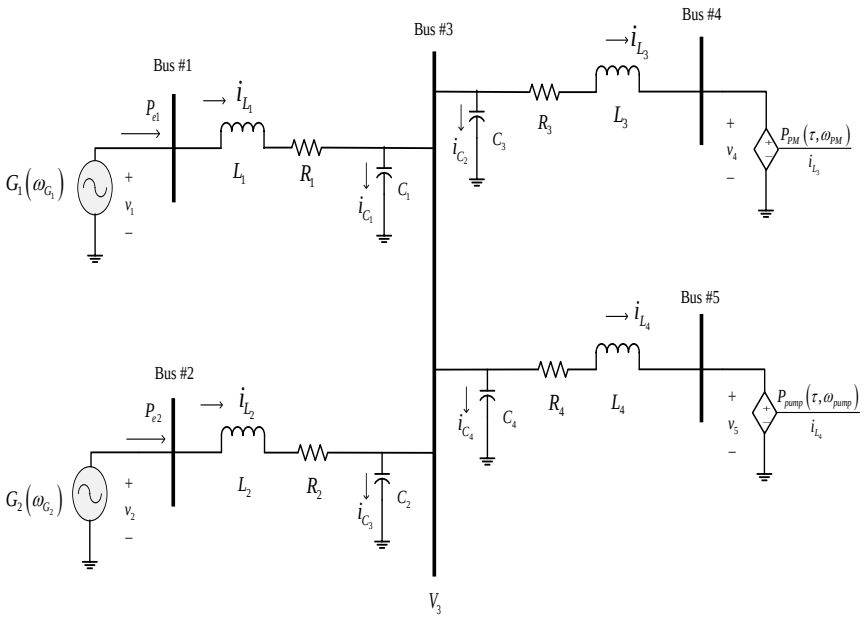

Figure 5: Simplified example of a shipboard power system

$$\dot{i}_{L_1} = \frac{1}{L_1}\left(v_1 - v_3 - R_1 i_{L_1}\right)$$

$$\dot{i}_{L_2} = \frac{1}{L_2}\left(v_2 - v_3 - R_2 i_{L_2}\right)$$

$$\dot{i}_{L_3} = \frac{1}{L_3}\left(v_3 - v_4 - R_3 i_{L_3}\right)$$

$$\dot{i}_{L_4} = \frac{1}{L_4}\left(v_3 - v_5 - R_4 i_{L_4}\right)$$

$$\dot{v}_3 = \frac{i_{C_T}}{C_T}$$

$$0 = P_{M_1}\left(\tau_1, \omega_{G_1}\right) - \left(v_3 + R_1 i_{L_1}\right) i_{L_1}$$

$$0 = P_{M_2}\left(\tau_2, \omega_{G_2}\right) - \left(v_3 + R_2 i_{L_2}\right) i_{L_2}$$

$$0 = P_{PM}\left(\tau_{PM}, \omega_{PM}\right) + \left(v_3 - R_3 i_{L_3}\right) i_{L_3}$$

$$0 = P_{pump}\left(\tau_{pump}, \omega_{pump}\right) + \left(v_3 - R_4 i_{L_4}\right) i_{L_4}$$

$$x = \left[i_{L_1}, i_{L_2}, i_{L_3}, i_{L_4}, v_3, \omega_{G_1}, \omega_{G_2}, \omega_{PM}, \omega_{pump} \right]^T$$

Example 1: Load increase at bus # 5

- With generator power at bus # 2 and load at bus # 4 kept constant the system model is described by:

$$\dot{\omega}_{pump} = -\frac{D_{pump}\omega_{pump}}{M_{pump}} + \frac{1}{M_{pump}}\left[-\tau_{pump}\omega_{pump} + \left(v_3 - R_4 i_{L_4}\right) i_{L_4}\right]$$

$$0 = -\tau_{pump}\omega_{pump} + v_5\left(\frac{v_3 - v_5}{R_4}\right)$$

$$p_1 : h_1\left(x, N\right) = \tau_{pump}\omega_{pump}$$

$$x = \left[\omega_{pump}, v_5\right]^T$$

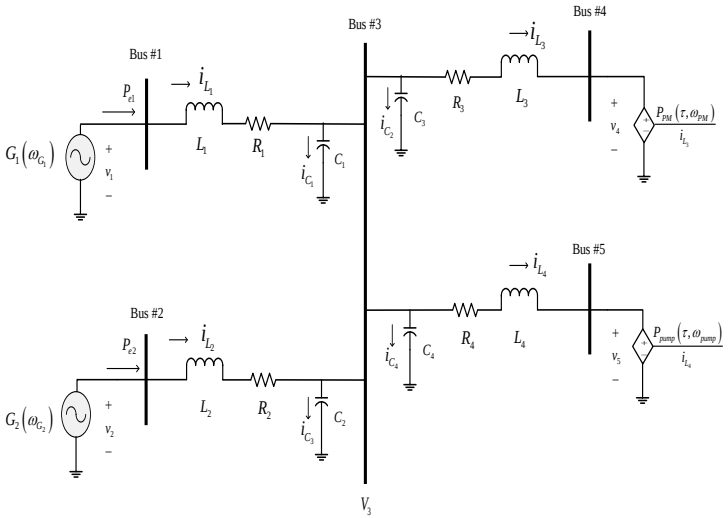

Figure 6: Simplified example of a shipboard power system

- And setting the differentiation indices $r = s = 1$, the observability Jacobian has the following general form:

$$J_O = \begin{bmatrix} j_{1,1} & j_{1,2} & j_{1,3} & 0 & 0 & 0 \\ j_{2,1} & j_{2,2} & 0 & 0 & 0 & 0 \\ 0 & 0 & j_{3,3} & j_{3,4} & j_{3,5} & 0 \\ 0 & 0 & j_{4,3} & j_{4,4} & 0 & 0 \\ j_{5,1} & 0 & 0 & 0 & 0 & 0 \\ 0 & 0 & j_{6,3} & 0 & 0 & 0 \end{bmatrix}$$

Example 1 (cont.)

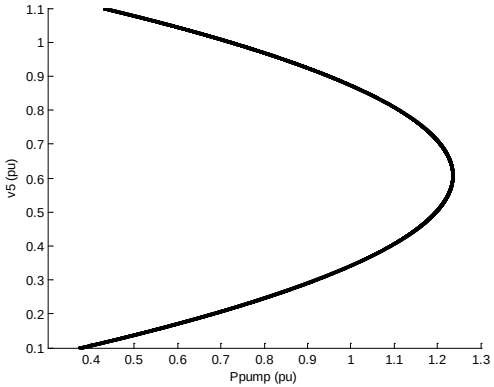

Figure 7: PV curve for load bus # 5

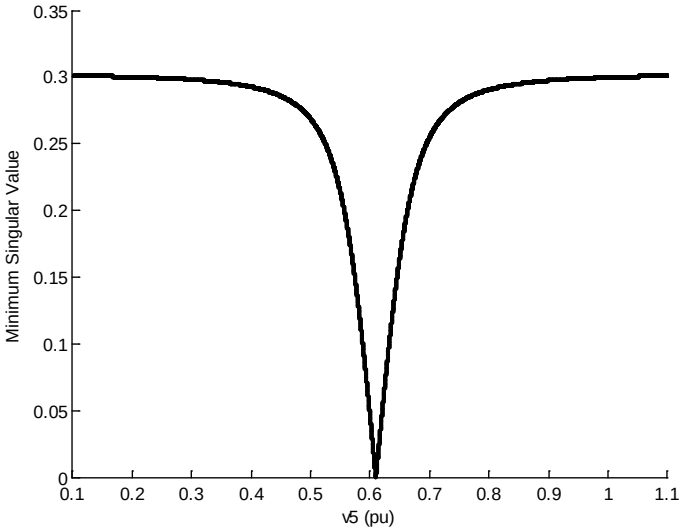

Figure 8: λmin value along PV curve of Fig. 7

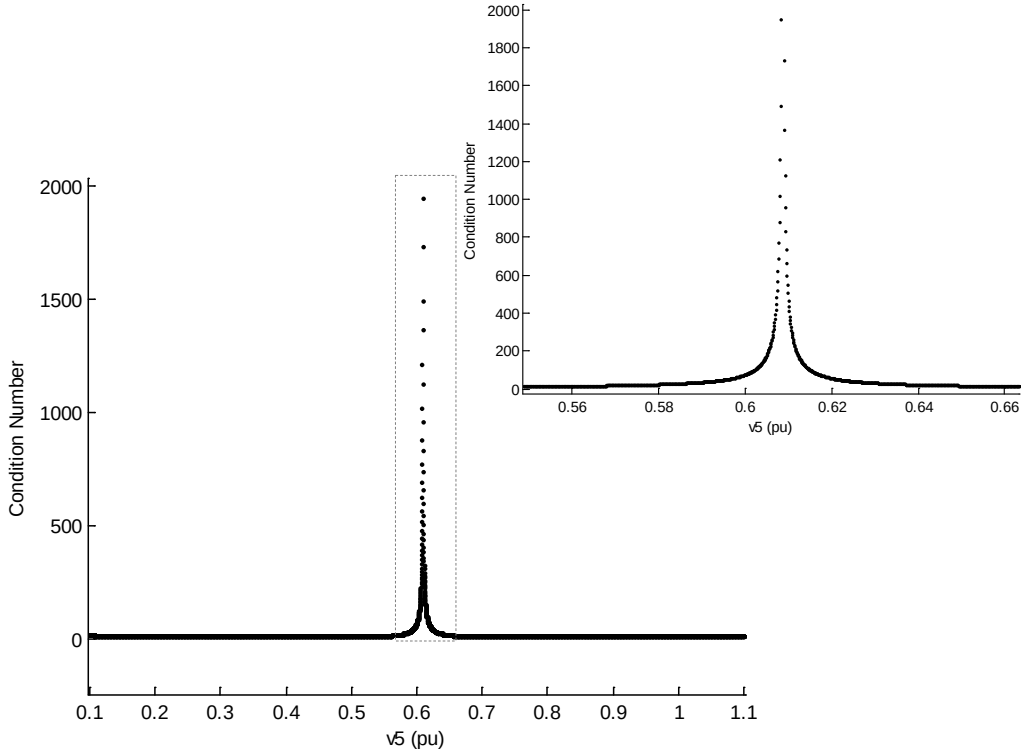

Figure 9: Condition number along PV curve of Fig. 7

General Observations

- As the system reaches maximum loading condition the observability Jacobian is close to becoming singular
  - Smallest singular value approaching zero
  - The condition number increases significantly
    - Indicating duality between loss of observability and unstable point (max loading condition)

- For the purpose of system control this duality can be exploited
  - The observability criterion can be used as a metric to identify system performance
    - Allow one to foresee actions to avoid unwanted changes in the system

Bilateral Loading Studies

- With generator power at bus # 2 kept constant and load at bus # 4 and # 5 varied simultaneously the system model of Fig. 4 is described by:

$$\dot{\omega}_{PM} = -\frac{D_{PM}}{M_{PM}}\left(\omega_{PM}\right) + \frac{1}{M_{PM}}\left[-\tau_{PM}\omega_{PM} + \left(v_3 - R_3 i_{L_3}\right) i_{L_3}\right]$$

$$\dot{\omega}_{pump} = -\frac{D_{pump}\omega_{pump}}{M_{pump}} + \frac{1}{M_{pump}}\left[-\tau_{pump}\omega_{pump} + \left(v_3 - R_4 i_{L_4}\right) i_{L_4}\right]$$

$$0 = -\tau_{PM}\omega_{PM} + v_4\left(\frac{v_3 - v_4}{R_3}\right)$$

$$0 = -\tau_{pump}\omega_{pump} + v_5\left(\frac{v_3 - v_5}{R_4}\right)$$

$$p_1 : h_1(x, N) = \tau_{PM}\omega_{PM}$$

$$p_2 : h_2(x, N) = \tau_{pump}\omega_{pump}$$

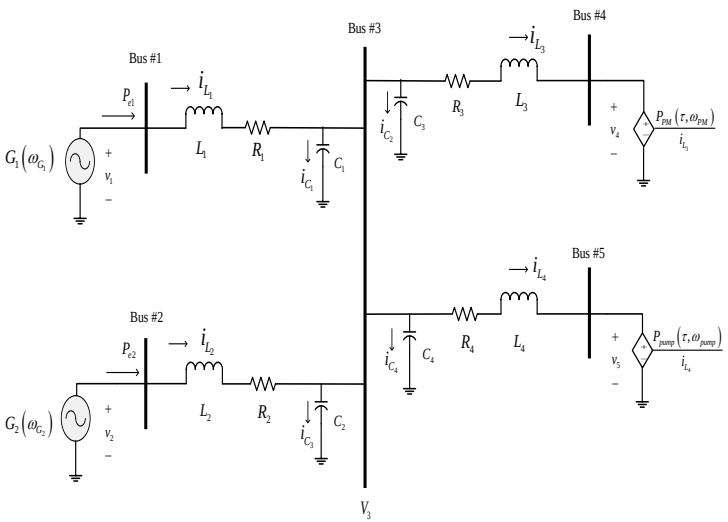

Figure 10: Simplified example of a shipboard power system

Bilateral Loading Studies (cont.)

- Setting the differentiation indices $r = s = 1$, the observability Jacobian has the following general form:

$$
J_O = \begin{array}{c}
\begin{bmatrix}
\frac{dF}{dx} & \frac{dF}{d\dot{x}} & 0 & 0 & \cdots \\
\frac{dF^{(1)}}{dx} & \frac{dF}{dx} & \frac{dF}{d\dot{x}} & \vdots & \cdots \\
\vdots & \vdots & \vdots & \vdots & \vdots \\
\frac{dh}{dx} & 0 & 0 & 0 & \cdots \\
\frac{dh^{(1)}}{dx} & \frac{dh}{dx} & 0 & 0 & \cdots \\
\vdots & \vdots & \vdots & \vdots & \vdots
\end{bmatrix}
\begin{array}{l}
F \\ F^{(1)} \\ F^{(s)} \\ h \\ h^{(1)} \\ h^{(r)}
\end{array} \\
\begin{array}{ccccc}
x & \dot{x} & \ddot{x} & \dddot{x} & x^{(\sigma)}
\end{array}
\end{array}
$$

where

$$
\frac{dF}{dx} = \begin{bmatrix}
\frac{D_{PM} + \tau_{PM}}{M_{PM}} & 0 & \frac{2v_4 - v_3}{M_{PM} R_3} & 0 \\
0 & \frac{D_{pump} + \tau_{pump}}{M_{pump}} & 0 & \frac{2v_5 - v_3}{M_{pump} R_4} \\
-\tau_{PM} & 0 & \frac{v_3 - 2v_4}{R_3} & 0 \\
0 & -\tau_{pump} & 0 & \frac{v_3 - 2v_5}{R_4}
\end{bmatrix}
$$

$$
\frac{dF}{d\dot{x}} = \begin{bmatrix}
1 & 0 & 0 & 0 \\
0 & 1 & 0 & 0 \\
0 & 0 & 0 & 0 \\
0 & 0 & 0 & 0
\end{bmatrix}
$$

$$
\frac{dh}{dx} = \begin{bmatrix}
\tau_{PM} & 0 & 0 & 0 \\
0 & \tau_{pump} & 0 & 0
\end{bmatrix}
$$

Bilateral Loading Studies (cont.)

- Load at buses 4 and 5 in Fig. 4 are varied through the scalar quantity α (increased monotonically) according to the following equation:

$$\begin{bmatrix} P_{PM} \\ P_{pump} \end{bmatrix} = \begin{bmatrix} P^0_{PM} \\ P^0_{pump} \end{bmatrix} + \alpha \begin{bmatrix} \Delta P_{PM} \\ \Delta P_{pump} \end{bmatrix} \rightarrow \begin{bmatrix} \omega_{PM} \\ \omega_{pump} \end{bmatrix} = \begin{bmatrix} \omega^0_{PM} \\ \omega^0_{pump} \end{bmatrix} + \alpha \begin{bmatrix} \Delta\omega_{PM} \\ \Delta\omega_{pump} \end{bmatrix}$$

where

$$\begin{bmatrix} \omega^0_{PM} \\ \omega^0_{pump} \end{bmatrix} = \begin{bmatrix} 1 \\ 0.3615 \end{bmatrix}$$

$$\begin{bmatrix} \Delta\omega_{PM} \\ \Delta\omega_{pump} \end{bmatrix} = \begin{bmatrix} 0.0025 \\ 0.003 \end{bmatrix}$$

- And system parameters:

τ_1	τ_2	τ_{PM}	τ_{pump}
0.98	0.95	1.1	1.03
R_1	R_2	R_3	R_4
0.1	0.1	0.2	0.3
v_2		v_3	
1.35		1.2171	

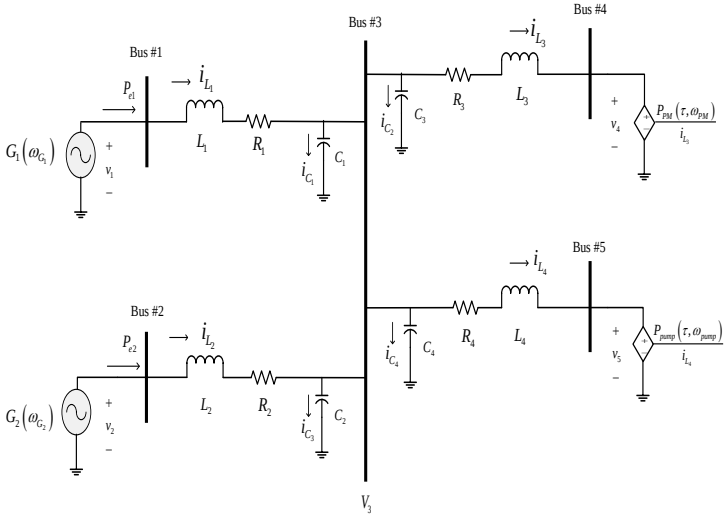

Figure 11: Simplified example of a shipboard power system

Bilateral Loading Studies (cont.)

- The observability Jacobian is analyzed along the Vα profile of the system

- For each point along the upper Vα curve
  - a singular value decomposition of the observability Jacobian is performed and the resulting condition number is extracted

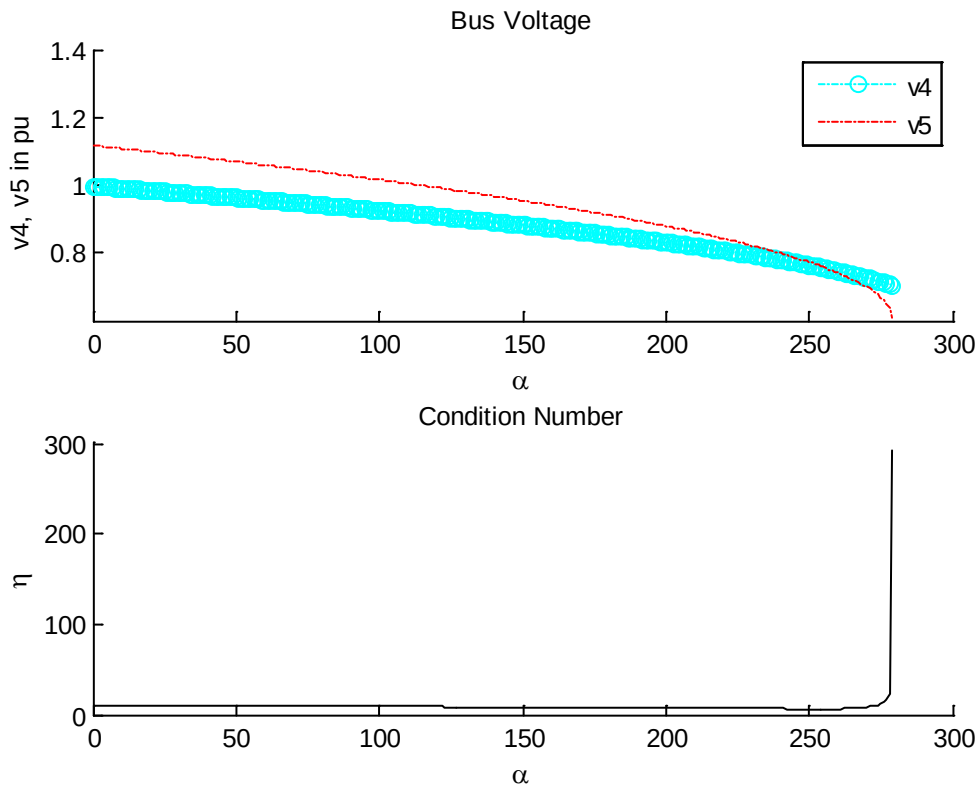

Figure 12: Vα curve for load buses 4 and 5 (top) and condition number vs α (bottom)

Bilateral Loading Studies (cont.)

- As a second case study, $\Delta\omega_{PM}$ and $\Delta\omega_{pump}$ have been varied for a total system load increment of 1% each time α is incremented, i.e. $\Delta\omega_{PM} + \Delta\omega_{pump} = 0.01$.

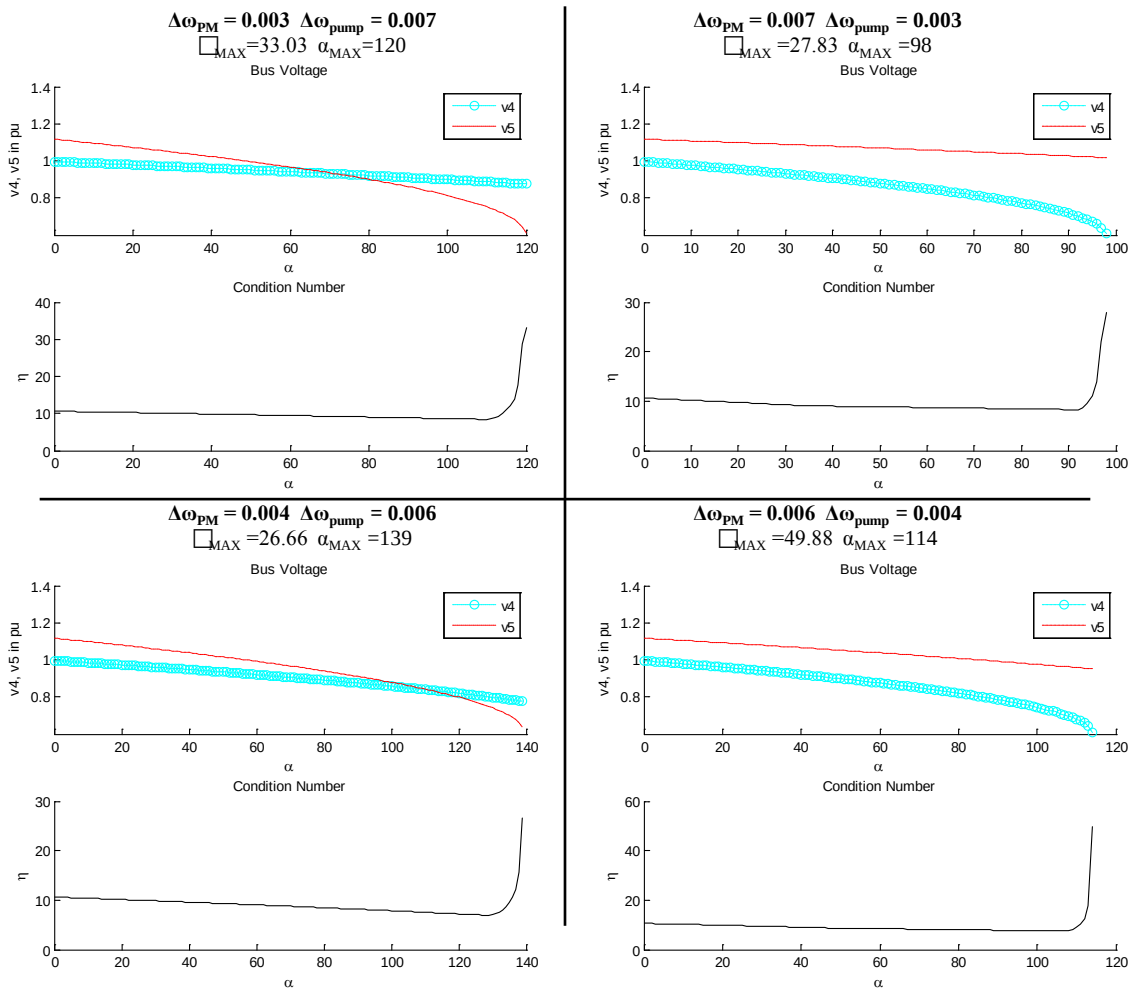

Figure 13: Vα curves and condition number vs α for different values of $\Delta\omega_{PM}$ and $\Delta\omega_{pump}$

Bilateral Loading Studies (cont.)

- A family of □α curves could be of interest as it would provide a system operator with information of how the system behaves depending on the values of α, $\Delta\omega_{PM}$ and $\Delta\omega_{pump}$,and initial conditions
  - With this information one can foresee actions that would avoid unwanted changes in the system

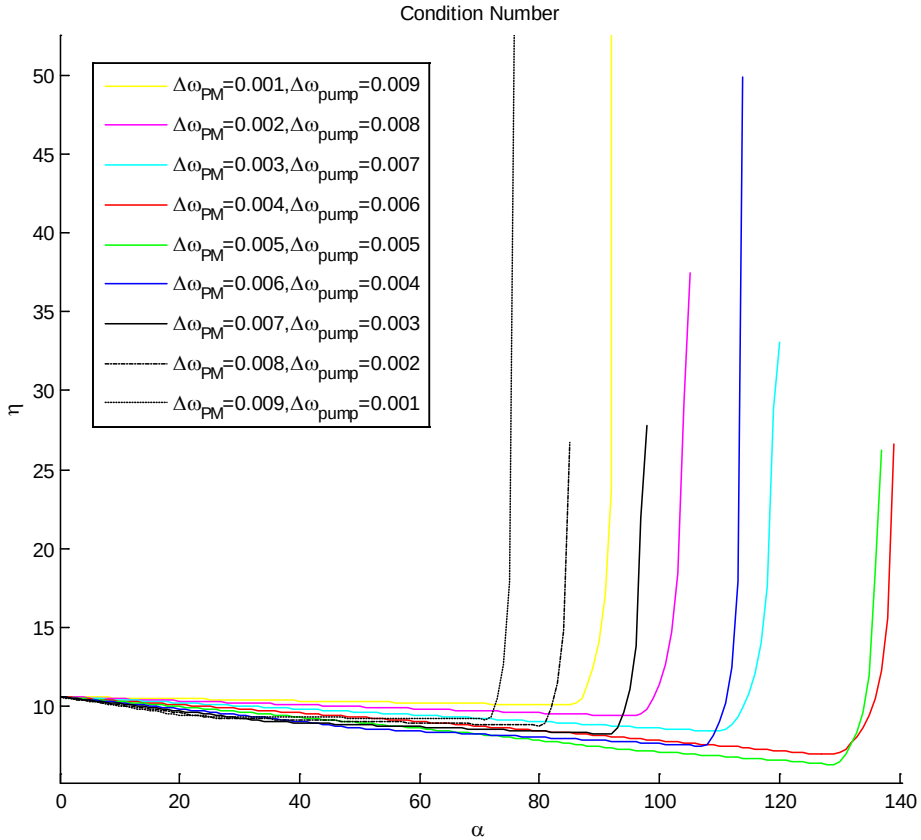

Figure 14: Family of □α curves

Conclusions

- The observability formulation was applied to an equivalent DC system were observability measure was the focus of study
- This measure called condition number provided information on how far the system is from loosing observability
- Static cases were presented were the condition number was evaluated at each operating point along a load profile.
- *Future work:*
  - Perturbation of initial conditions on static cases need to be performed as it would provide an observability threshold
  - Dynamic cases are to be investigated were observability is tracked along system states trajectories

Questions?

The authors would like to thank the US office of Naval Research for their financial support under grant no. N00014-10-1-0195