Emerging Computational Methods for Smart Grids

Ganesh Kumar Venayagamoorthy, PhD, FIET, FSAIEE, SMIEEE

Founder and Director of the Real-Time Power & Intelligent Systems (RTPIS) Laboratory
Professor of Electrical and Computer Engineering (eff. 9/11)
Missouri University of Science and Technology (Missouri S&T), Rolla, MO 65409

http://www.mst.edu/~ganeshv
http://rtpis.org
http://brain2grid.org

E-mail: gkumar@ieee.org

© G. Kumar Venayagamoorthy – A Keynote Presentation at the Fourth International Symposium on Resilient Control Systems, Boise, ID, USA, August 9, 2011

Outline

- Introduction
- Smart Grid
- Emerging Computational Methods
- Wide Area Control Systems
- Plug-in Electric Vehicles – G2V and V2G Transactions
- Brain2Grid Project
- Summary

© G. Kumar Venayagamoorthy – A Keynote Presentation at the Fourth International Symposium on Resilient Control Systems, Boise, ID, USA, August 9, 2011

Acknowledgments

- Financial support from the following federal agencies is gratefully acknowledged:
  - National Science Foundation
  - US Office of Naval Research
  - US Department of Education

- RTPIS Lab Scholars and EFRI-COPN Team (S&T and GTECH)

Outline

- **Introduction**
- Smart Grid
- Emerging Computational Methods
- Wide Area Control Systems
- Plug-in Electric Vehicles – G2V and V2G Transactions
- Brain2Grid Project
- Summary

© G. Kumar Venayagamoorthy – A Keynote Presentation at the Fourth International Symposium on Resilient Control Systems, Boise, ID, USA, August 9, 2011

Electric Power Grid

- The electric power grid is a complex adaptive system consisting of a range of energy sources including fossil fuel, nuclear, renewable resources, and energy storage with many operational levels and layers (including power plants, transmission and distribution networks and control centers).

- The interactions of various power system elements, including physical components with humans-in-the-loop, further increases the complexity of the power grid.

© G. Kumar Venayagamoorthy – A Keynote Presentation at the Fourth International Symposium on Resilient Control Systems, Boise, ID, USA, August 9, 2011

Electric Power Grid

- On the other hand, the diversity of the time scales involved in the operation of different power system elements, further adds to this complexity.

- Time scales for various control and operation tasks can be as short several microseconds and as long as several years, which makes it even more difficult to model, analyze, simulate, control and operate a power grid
  - North American power grid
  - 20th century

© G. Kumar Venayagamoorthy – A Keynote Presentation at the Fourth International Symposium on Resilient Control Systems, Boise, ID, USA, August 9, 2011

Electric Power Grid

- Today, controllers are mostly designed based on linearized models of the power system obtained around some nominal operating points.
- These designs do not guarantee robustness, optimality and, good and consistent performance over a wide range of operating conditions.
- On the other hand, robust and optimal controllers can be designed based on H^{∞} and other classical techniques but these require precise knowledge and accurate high order models.
- The practical implementation of such controllers for a real power system is difficult and cumbersome.

© G. Kumar Venayagamoorthy – A Keynote Presentation at the Fourth International Symposium on Resilient Control Systems, Boise, ID, USA, August 9, 2011

Electric Power Grid

- Classical optimization techniques are mostly able to find local optimum solutions for power system optimization problems but intelligent optimization techniques are able to find near-optimal global solutions.

- To ensure improved efficiency, reliability, security and sustainability of power & energy systems, advanced computational methods are needed to *embed intelligence in the grid* – the birth of smart energy grids.

© G. Kumar Venayagamoorthy – A Keynote Presentation at the Fourth International Symposium on Resilient Control Systems, Boise, ID, USA, August 9, 2011

Outline

- Introduction
- **Smart Grid**
- Emerging Computational Methods
- Wide Area Control Systems
- Plug-in Electric Vehicles – G2V and V2G Transactions
- Brain2Grid Project
- Summary

© G. Kumar Venayagamoorthy – A Keynote Presentation at the Fourth International Symposium on Resilient Control Systems, Boise, ID, USA, August 9, 2011

Smart Grid

A smart grid must have certain basic functions for modernization of the grid (as indicated in the Energy Independence and Security Act (EISA) of 2007), including:

- Self-healing
- Fault-tolerant
- Dynamic integration of all forms of energy generation & storage
- Dynamic optimization of grid operation and resources with full cyber-security
- Demand-response, demand-side resources and energy-efficient resources
- Electricity clients' active participation
- Reliability, power quality, security and efficiency.

Smart grid's growing complexity requires different approaches to traditional methods of modeling, control and optimization in power systems.

© G. Kumar Venayagamoorthy – A Keynote Presentation at the Fourth International Symposium on Resilient Control Systems, Boise, ID, USA, August 9, 2011

Maximum Utilization of Renewable Energy in a Smart Microgrid

Computational tools are needed for building resilience:

- Predictions of wind & solar energy,
- Forecasting of loads & reserves,
- Dynamic dispatch, &
- Handle uncertainties & variability.

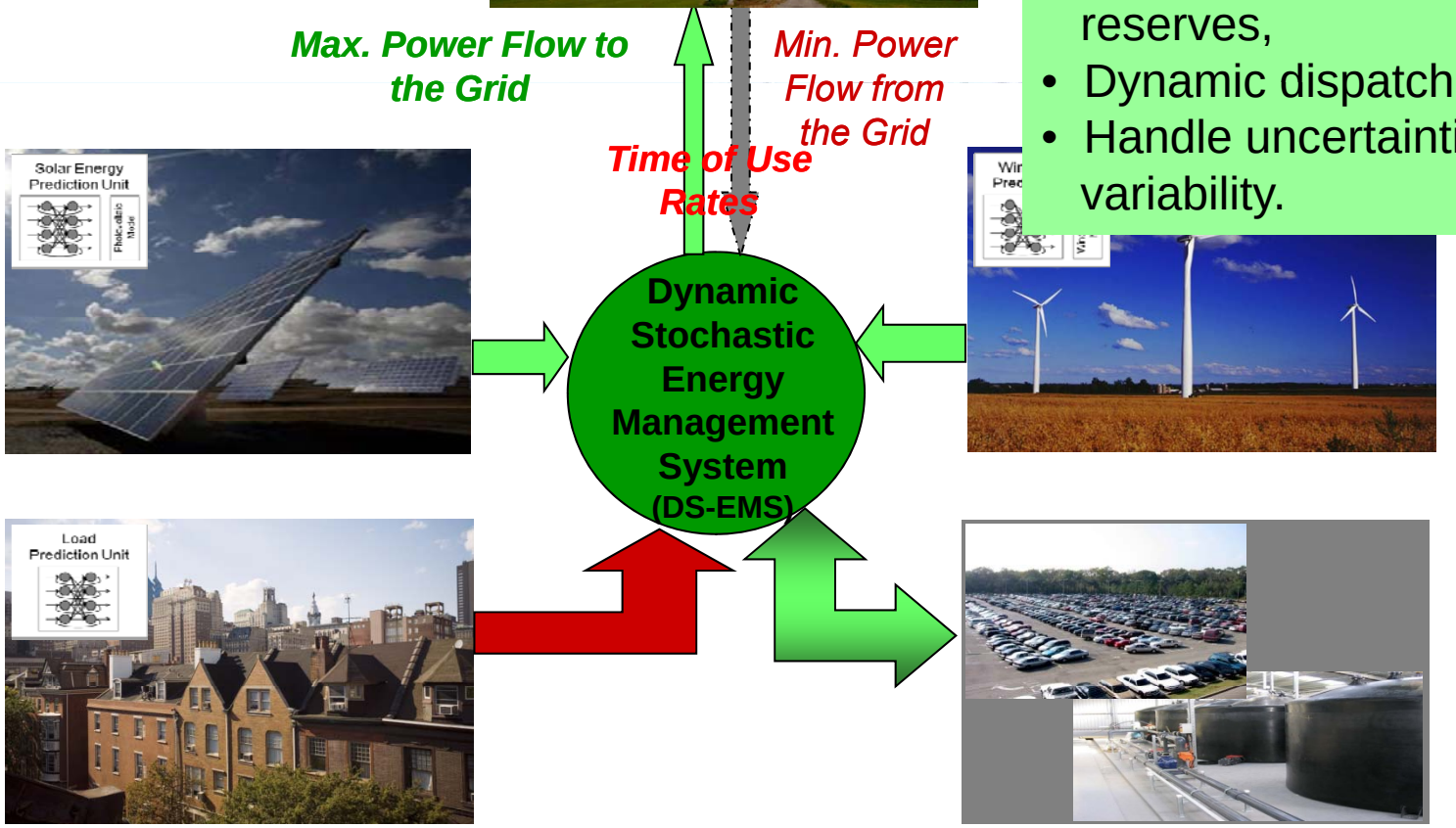

© G. Kumar Venayagamoorthy – A Keynote Presentation at the Fourth International Symposium on Resilient Control Systems, Boise, ID, USA, August 9, 2011

Enabling C^3 Technologies (with Challenges)

- A skyscraper is designed to withstand a massive earthquake; a bridge/arch sways in the wind to without collapsing.
- Plug-and-play technology.
- An advanced resilient design is needed for smart grids.

- Communication (includes information systems)
  - Intelligent sensing and communication devices for processing of information.
  - Smart pricing – real time (consumers use less if they know the cost).
  - Smart grid devices and intelligent in-home energy management systems.

- Control
  - Situational Awareness (Intelligent sense-making, resilience) - Real-time monitoring and control
  - Load peak shaving technologies – Off-peak hours intelligently scheduled (especially for charging plug-in vehicles).
  - Real-time dynamic reconfiguration.

- Computation
  - Estimation & Forecasting models – Load, wind and solar energies, reserve margin, more accurate prediction tools are needed.
  - Fast (faster than real-time) optimization (to handle uncertainties and variabilities), decision making and control (adaptation) tools.

Outline

- Introduction
- Smart Grid
- **Emerging Computational Methods**
- Wide Area Control Systems
- Plug-in Electric Vehicles – G2V and V2G Transactions
- Brain2Grid Project
- Summary

© G. Kumar Venayagamoorthy – A Keynote Presentation at the Fourth International Symposium on Resilient Control Systems, Boise, ID, USA, August 9, 2011

Computational Intelligence (A Smart Grid Friendly Description)

Computational intelligence (CI) can be defined as *computational models and tools of intelligence*

- *capable of taking large raw numerical sensory data directly,*
- *processing them by exploiting the representational parallelism and pipelining the problem,*
- *generating reliable just-in-time responses*
- *with high fault tolerance.*

Intelligence without computing is like bird without wings

- G K Venayagamoorthy

A Promising Brain-Like Computational Approach: Adaptive Critic Designs (ACDs)

- The Adaptive critic designs have the potential of replicating critical aspects of brain-like intelligence:
  - ability to cope with a large number of variables in parallel, in real time, in a noisy nonlinear non-stationary environment

- The origins of ACDs are ideas synthesized from combined concepts of approximate dynamic programming, reinforcement learning, and methods for obtaining derivatives (such as backpropagation).

- ACDs are promising methods to solve dynamic optimization and optimal control problems.

© G. Kumar Venayagamoorthy – A Keynote Presentation at the Fourth International Symposium on Resilient Control Systems, Boise, ID, USA, August 9, 2011

Adaptive Critic Designs

- A family of ACDs was proposed by Werbos (currently at NSF, PD) in 1977 as a new optimization technique combining concepts of reinforcement learning and approximate dynamic programming.

- The adaptive critic method determines optimal control laws for a system by successively adapting two neural networks, namely an *Action network* (which dispenses control signals, also known as the *Actor*) and a *Critic network* (which learns the desired performance index for some function associated with the performance index).

- The *Actor-Critic* combination approximates the Hamilton-Jacobi-Bellman equation associated with optimal control theory.

© G. Kumar Venayagamoorthy – A Keynote Presentation at the Fourth International Symposium on Resilient Control Systems, Boise, ID, USA, August 9, 2011

An ACD Approach for Dynamic Scheduling, Control and Optimization

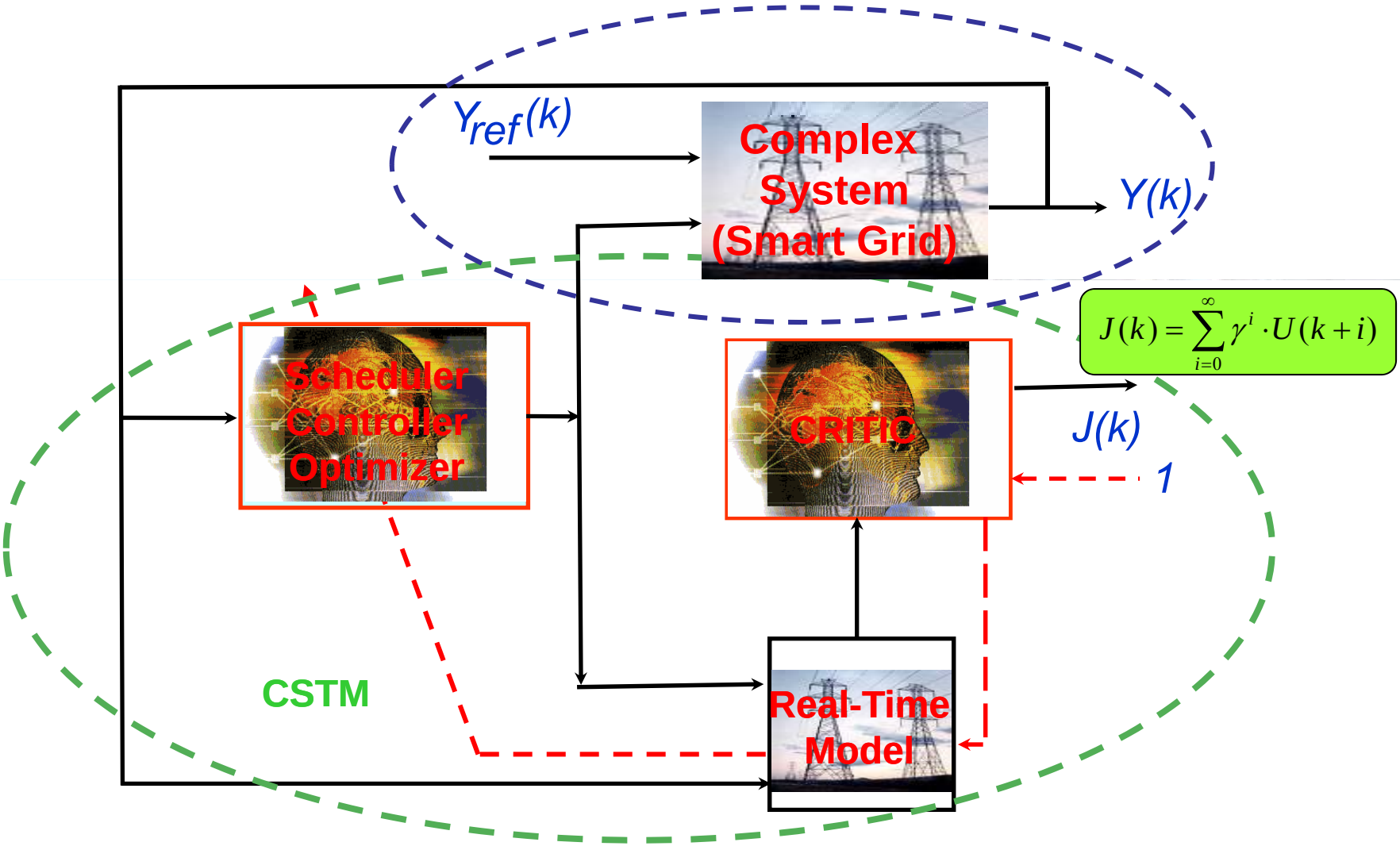

Outline

- Introduction
- Smart Grid
- Emerging Computational Methods
- **Wide Area Control Systems – DSOPF**
- Plug-in Electric Vehicles – G2V and V2G Transactions
- Brain2Grid Project
- Summary

© G. Kumar Venayagamoorthy – A Keynote Presentation at the Fourth International Symposium on Resilient Control Systems, Boise, ID, USA, August 9, 2011

Wide Area Monitoring Systems (WAMS)

- WAMS based on synchronized phasor measurements units (PMUs) allows for:
  - Grid observability
  - Dynamic state estimation
  - Dynamic generator status monitoring
  - Synchronized wide-area voltage and current monitoring
  - Implementing various WAC schemes that require remote signals.

- To date – WAMS based WAC schemes have been focused on:
  - Transient/small-signal stabilizing control to mitigate angle stability
  - Secondary voltage control to mitigate voltage instability.

- Development of a system-wide automatic power flow controller to dynamically control a power system to its optimal operating point has received little attention.

- [1]Fardanesh proposed a concept of an ideal control scenario for power systems, where optimal operating conditions were achieved instantaneously by some closed-loop control algorithms, but how to design such a control algorithm remains a challenge.

[1]B. Fardanesh, "Future trends in power system control," *IEEE Computer Applications in Power*, vol. 15, no. 3, pp. 24-31, Jul. 2002.

© G. Kumar Venayagamoorthy – A Keynote Presentation at the Fourth International Symposium on Resilient Control Systems, Boise, ID, USA, August 9, 2011

Optimal Power Flow

- Optimal power flow (OPF) or Security constrained OPF (CSOPF) is based on the steady-state optimization without considerations for local controller and load dynamics.

- Unforeseen short-term variations in load/generation between two dispatch times (5 minutes) is handled by simple linear controllers, with little or no system-wide optimization.

- Active power balancing is carried out by Automatic Generation Control (AGC).

- For reactive power support, locally-controlled reactive devices are used for voltage regulation (AVRs, switched capacitors, FACTS, etc).

© G. Kumar Venayagamoorthy – A Keynote Presentation at the Fourth International Symposium on Resilient Control Systems, Boise, ID, USA, August 9, 2011

Wind Power Integration

- With increasing penetration of intermittent renewable energy resources, power system operation is faced with more uncertainty and variability[1].
- With state-of-the-art wind forecasting methods, the hour-ahead forecast errors in wind power for a single wind farm are still around 10 to 15%[2].
- Power system operation is based on using load forecasting (low error) and existing EMS with deterministic security-constrained commitment and dispatch processes.
- These conservative operations leads to large amount of wind power curtailment[3].

[1]D. Maggio, C. D'Annunzio, S. Huang, C. Thompson, "Outstanding questions around increasing variable generation penetration in the ERCOT system," in *Proc. 2010 IEEE PES General Meeting*, Minneapolis, MN, 25-29 Jul. 2010.

[2]K. Porter and J. Rogers, "Status of centralized wind power forecasting in North America: May 2009 - May 2010," NREL subcontract report, NREL/SR-550-47853, Apr 2010.

[3]S. Fink, C. Mudd, K. Porter, and B. Morgenstern, "Wind energy curtailment case studies," NREL subcontract report, NREL/SR-550-46716, Oct. 2009.

© G. Kumar Venayagamoorthy – A Keynote Presentation at the Fourth International Symposium on Resilient Control Systems, Boise, ID, USA, August 9, 2011

WAMS-Based Dynamic Stochastic OPF Control

- With variations in generations/loads, significant power flow redistribution can occur in a short period.
  - Line-power overloading
  - Over/under bus voltages.

- Smart grid:
  - MIMO
  - Non-stationary
  - complex
  - nonlinear
  - dynamic system.

- WAMS based DSOPF control for:
  - Optimal and dynamic control of both active and reactive powers
  - High uncertainty and variability in a smart grid environment.

- [1,2]A computational approach - adaptive critic designs (ACDs) is used in the development of the DSOPF controller.

[1]G. K. Venayagamoorthy "NSF CAREER: Scalable Learning and Adaptation with Intelligent Techniques and Neural Networks for Reconfiguration and Survivability of Complex Systems, June 2004 to May 2011, US National Science Foundation, Grant - ECCS # 0348221.
[2]D.V. Prokhorov and D.C. Wunsch, II, "Adaptive Critic Designs", *IEEE Transactions on Neural Networks*, Vol.8, No. 5, Sep 1997, pp 997-1007.

© G. Kumar Venayagamoorthy – A Keynote Presentation at the Fourth International Symposium on Resilient Control Systems, Boise, ID, USA, August 9, 2011

Smart Grid

Wide Area Measurements Based Dynamic Stochastic Optimal Controller

Wide Area Measurements Based Monitoring

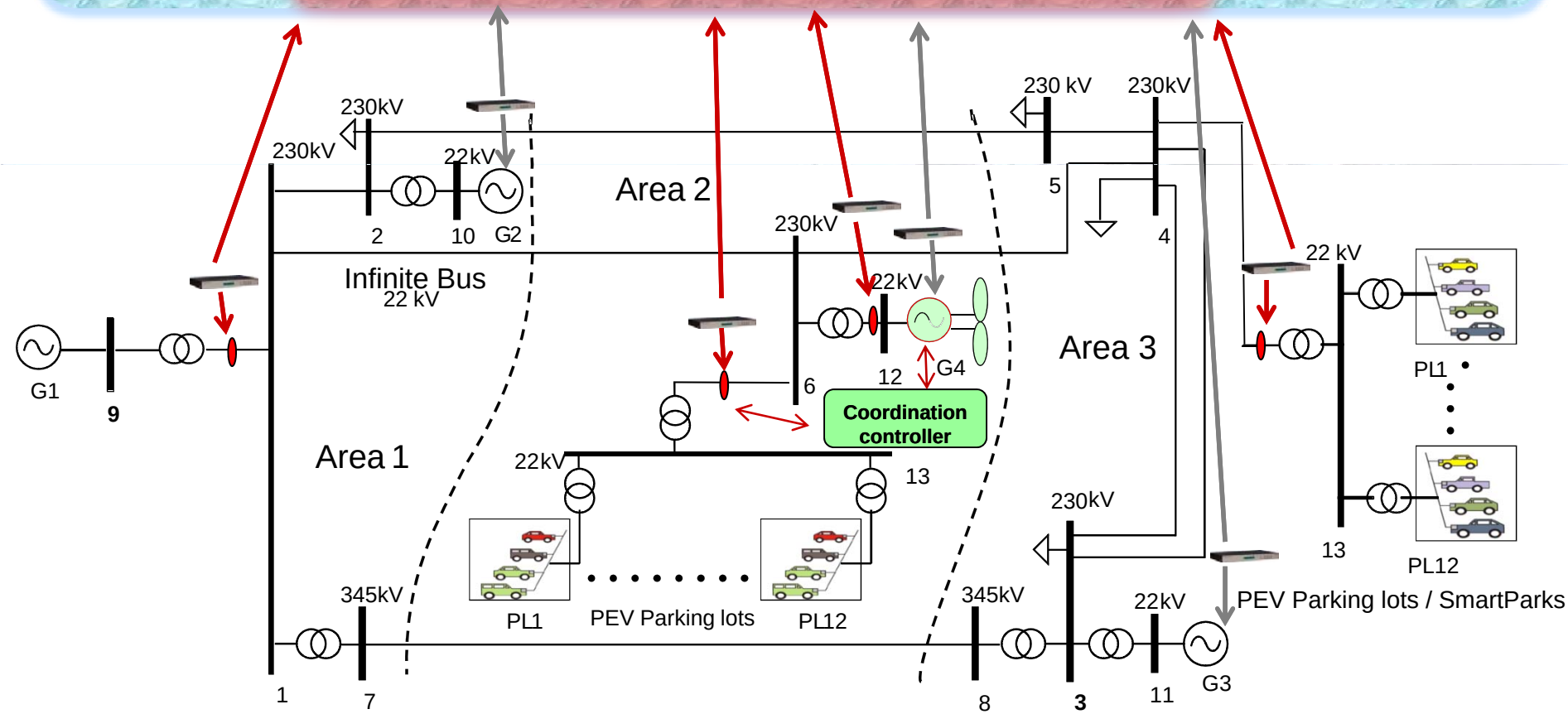

© G. Kumar Venayagamoorthy – A Keynote Presentation at the Fourth International Symposium on Resilient Control Systems, Boise, ID, USA, August 9, 2011

General DSOPF Framework for 12 Bus Test System

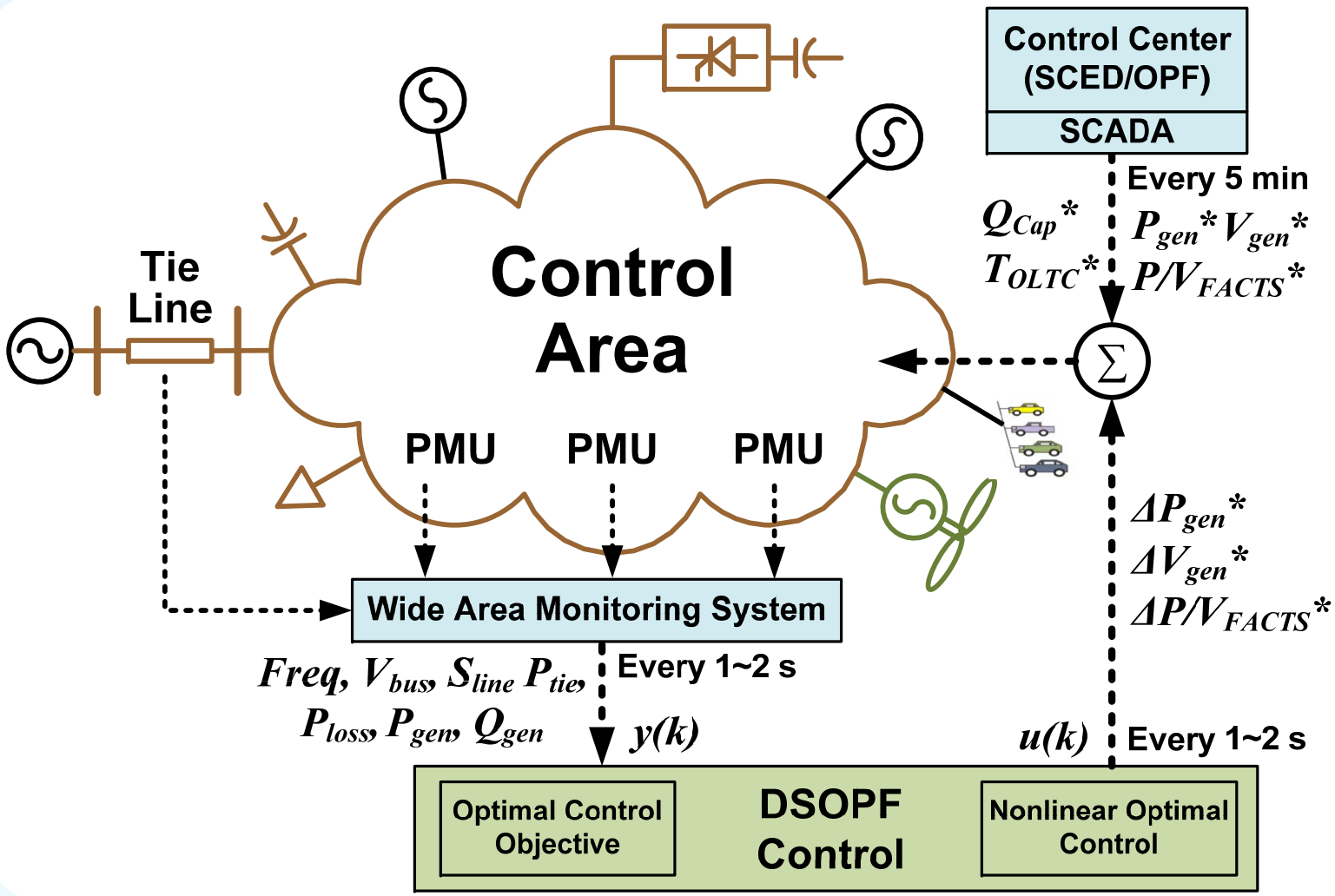

© G. Kumar Venayagamoorthy – A Keynote Presentation at the Fourth International Symposium on Resilient Control Systems, Boise, ID, USA, August 9, 2011

DSOPF Formulation

- Six components to the objective function (Utility Function, *U*)
  - Area control error, U_{ACE}
  - System voltage deviation, U_{volt}
  - System line loading, U_{Line}
  - Total fuel cost, U_{Fuel}
  - Total line loss, U_{Loss}
  - Control effort, U_{Ctrl}.

- Utility function, U, is thus defined as: $U(k) = U_{ACE}(k) + U_{Volt}(k) + U_{Line}(k) + U_{Fuel}(k) + U_{Loss}(k) + U_{Ctrl}(k)$

$$U_{ACE}(k) = w_{freq}\Delta f^{2}(k) + w_{tie}\Delta P_{tie}^{2}(k)$$
$$= w_{freq}\, y_1^2(k) / m_f^2 + w_{tie}\, y_{11}^2(k) / m_{Ptie}^2$$
$$U_{Volt}(k) = w_{volt} \,||\, \Delta V_{2\text{-}6}(k) \,||^2 = w_{volt} \,||\, y_{2\text{-}6}(k) \,||^2 \,/ m_V^2$$
$$U_{Line}(k) = w_{line}[e^{(S_{25}^4(k)-1)} + e^{(S_{16}^4(k)-1)} + e^{(S_{64}^4(k)-1)} + e^{(S_{78}^4(k)-1)}]$$
$$U_{Fuel}(k) = w_{fuel}[F_{G2}(k) + F_{G3}(k) + F_{G4}(k) - F^{offset}]$$
$$U_{Loss}(k) = w_{loss}P_{loss}(k) = w_{loss}[y_{15}(k) / m_{Loss} + P_{loss}^{offset}]$$
$$U_{Ctrl}(k) = w_{Pg} \,||\, \Delta P_{G2\text{-}4}^{*}(k) \,||^2 + w_{Vg} \,||\, \Delta V_{G2\text{-}4}^{*}(k) \,||^2$$
$$= w_{Pg} n_{Pg}^2 \,||\, u_{1\text{-}3}(k) \,||^2 + w_{Vg} n_{Vg}^2 \,||\, u_{4\text{-}6}(k) \,||^2$$

© G. Kumar Venayagamoorthy – A Keynote Presentation at the Fourth International Symposium on Resilient Control Systems, Boise, ID, USA, August 9, 2011

Dual Heuristic Programming (DHP) based DSOPF

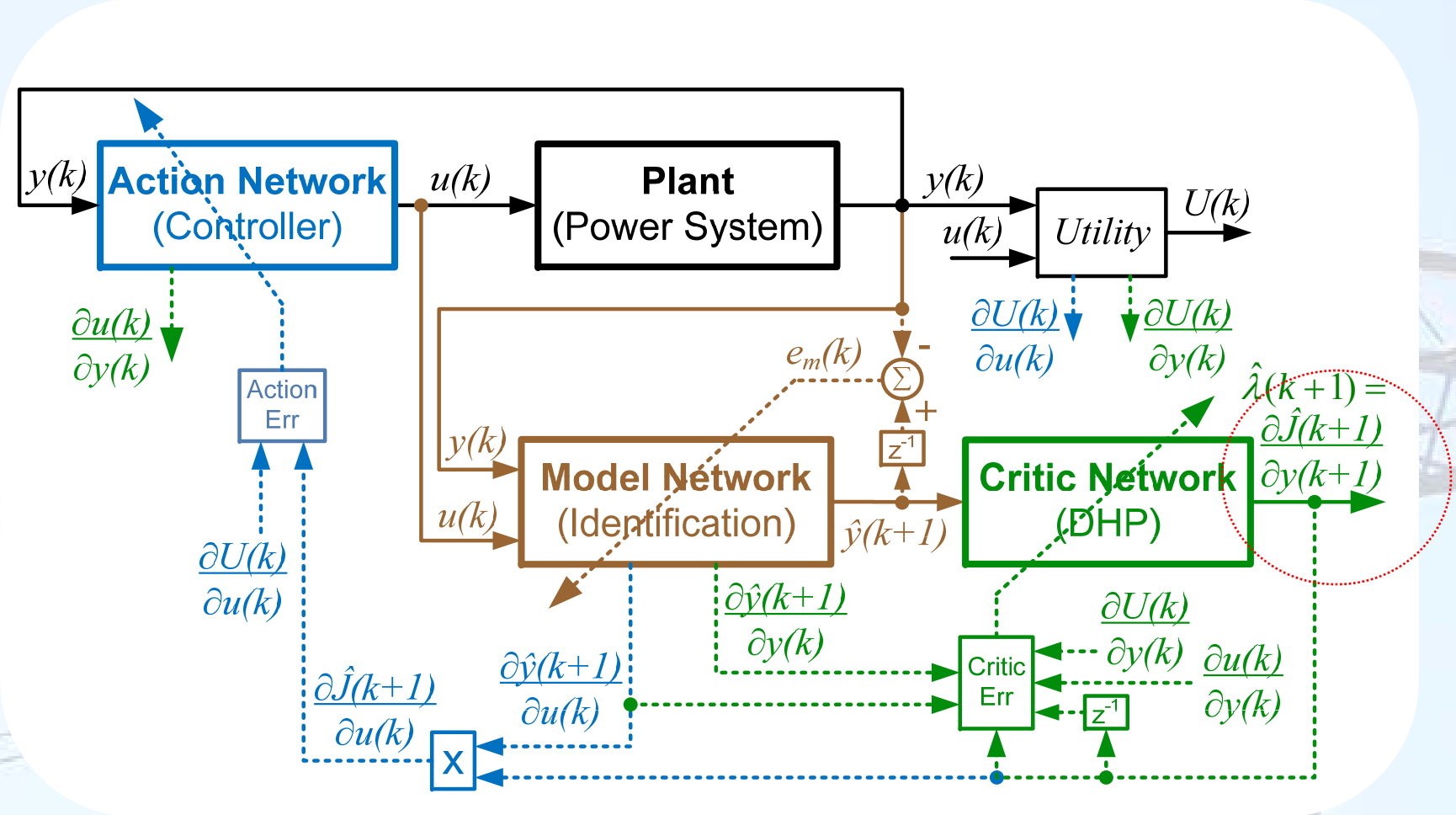

J Liang, R Harley, G Venayagamoorthy, "Adaptive Critic Design based Dynamic Optimal Power Flow Controller for a Smart Grid," *IEEE Symposium Series on Computational Intelligence* (*SSCI*) - *CIASG*, April 11-15, 2011

Liang J, Venayagamoorthy GK, Harley RG, "Wide-Area Measurement based Dynamic Stochastic Optimal Power Flow Control for Smart Grids with High Variability and Uncertainty" *under review for publication in the IEEE Transactions on Smart Grid*

© G. Kumar Venayagamoorthy – A Keynote Presentation at the Fourth International Symposium on Resilient Control Systems, Boise, ID, USA, August 9, 2011

Model Network

- A recurrent neural network based model is developed for identification of the power system dynamics
  - 21 inputs (*y(k)* and *u(k)*) and 15 outputs (*y(k)*)
  - Model predicts *y(k)* 1s ahead
  - $E_m(k) = ||e_m(k)||^2 = ||y(k) - \hat{y}(k)||^2$

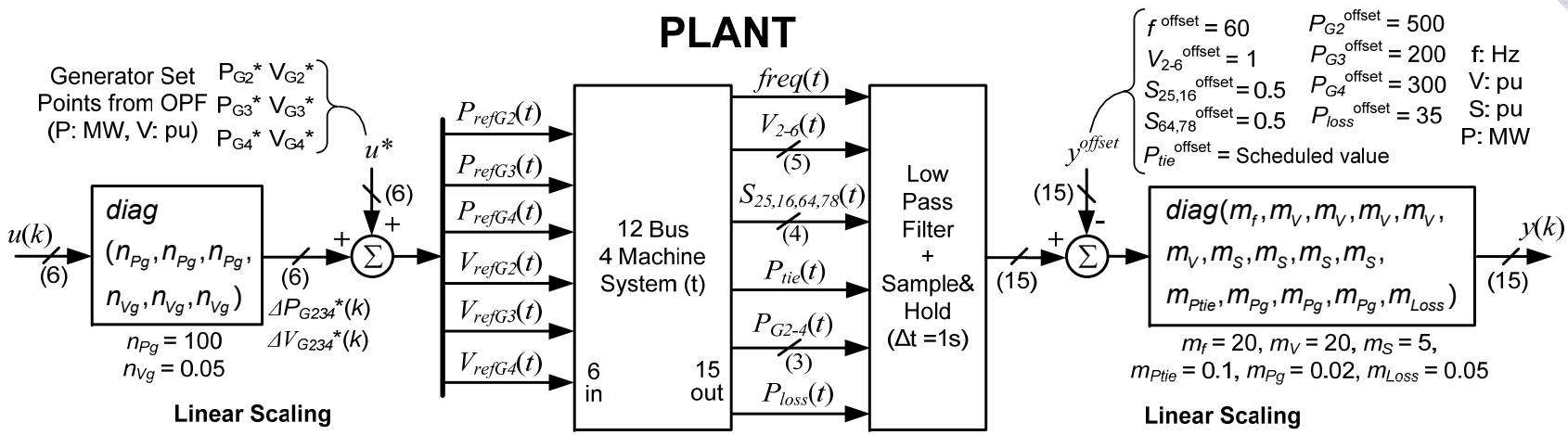

© G. Kumar Venayagamoorthy – A Keynote Presentation at the Fourth International Symposium on Resilient Control Systems, Boise, ID, USA, August 9, 2011

Critic Network Learning

- A RNN based DHP critic network learns online to approximate the derivative of $J(k+1)$ with respect to $y(k+1)$, denoted as $\lambda(k+1)$, by minimizing the following error:

$$E_c(k) = \|e_c(k)\|^2$$

$$e_c(k) = \hat{\lambda}(k) - \{\frac{\partial U(k)}{\partial y(k)} + \frac{\partial U(k)}{\partial u(k)}\frac{\partial u(k)}{\partial y(k)}$$

$$+ \gamma\hat{\lambda}(k+1)[\frac{\partial \hat{y}(k+1)}{\partial y(k)} + \frac{\partial \hat{y}(k+1)}{\partial u(k)}\frac{\partial u(k)}{\partial y(k)}]\}$$

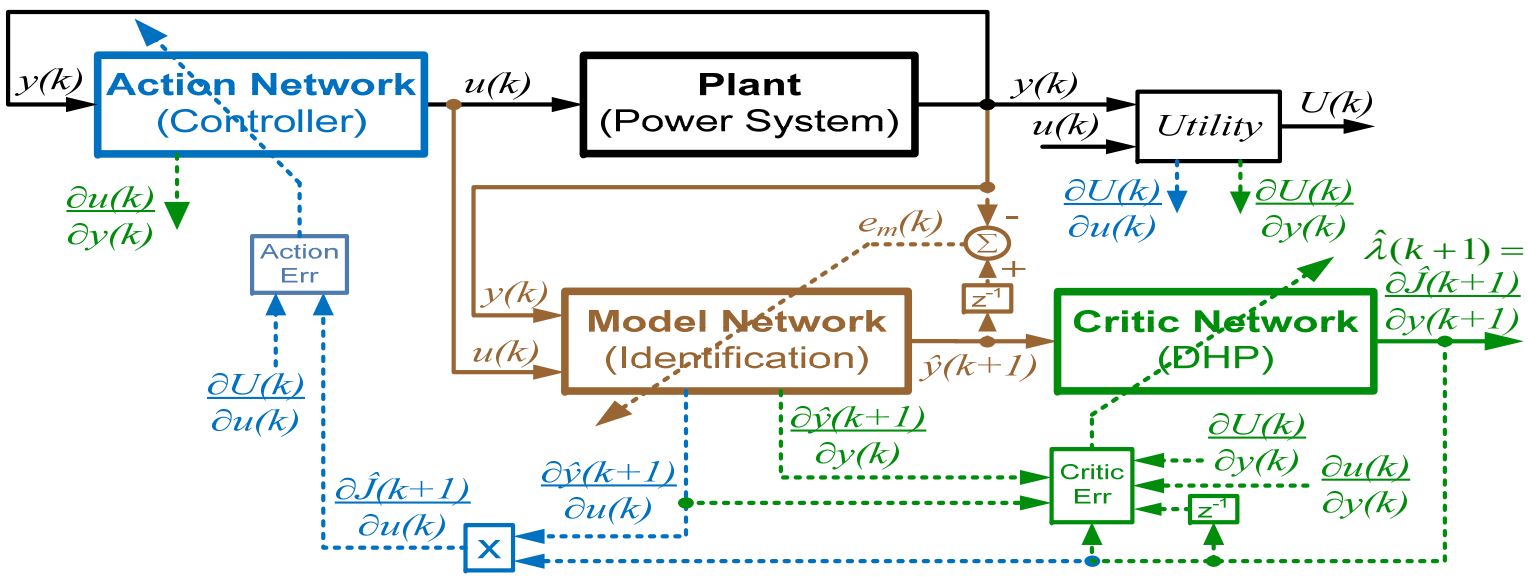

© G. Kumar Venayagamoorthy – A Keynote Presentation at the Fourth International Symposium on Resilient Control Systems, Boise, ID, USA, August 9, 2011

Optimal Control Law Approximation

- A RNN based action network learns to approximate the optimal control law by minimizing:

$$E_a(k) = \left\| \frac{\partial \hat{J}(k)}{\partial u(k)} \right\|^2$$

$$\frac{\partial \hat{J}(k)}{\partial u(k)} = \frac{\partial U(k)}{\partial u(k)} + \gamma \hat{\lambda}(k+1) \frac{\partial \hat{y}(k+1)}{\partial u(k)}$$

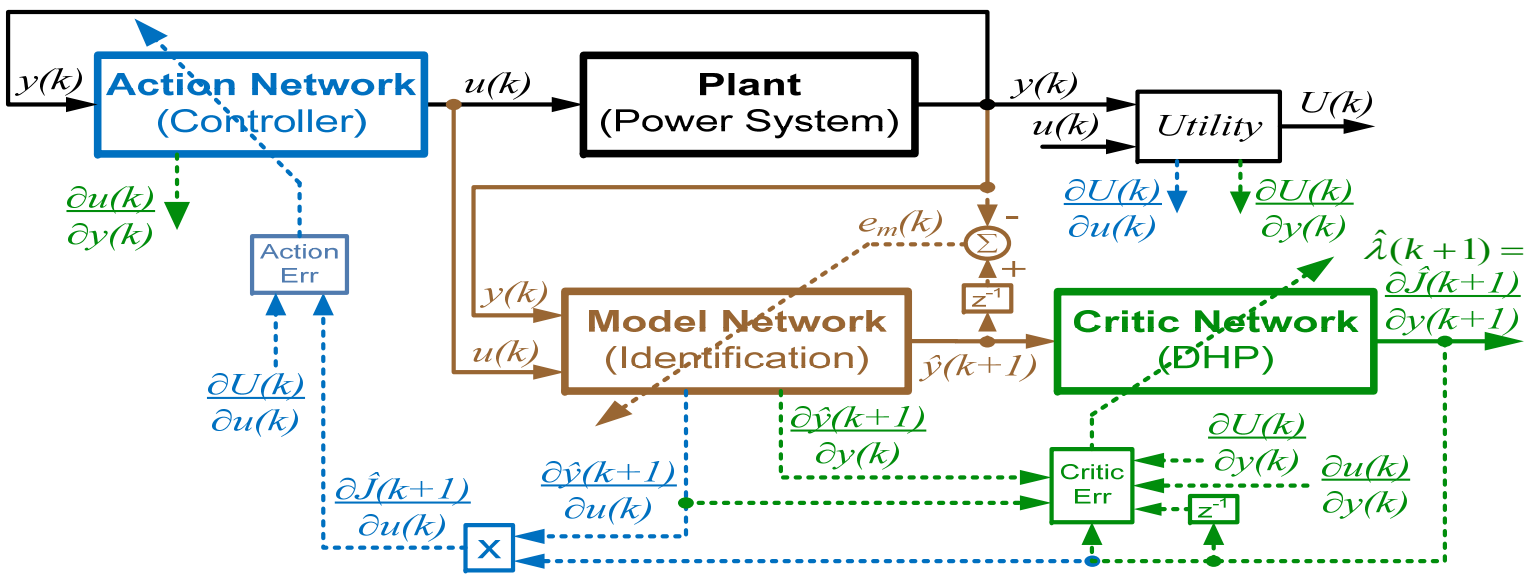

© G. Kumar Venayagamoorthy – A Keynote Presentation at the Fourth International Symposium on Resilient Control Systems, Boise, ID, USA, August 9, 2011

12 Bus Test System with AGCs

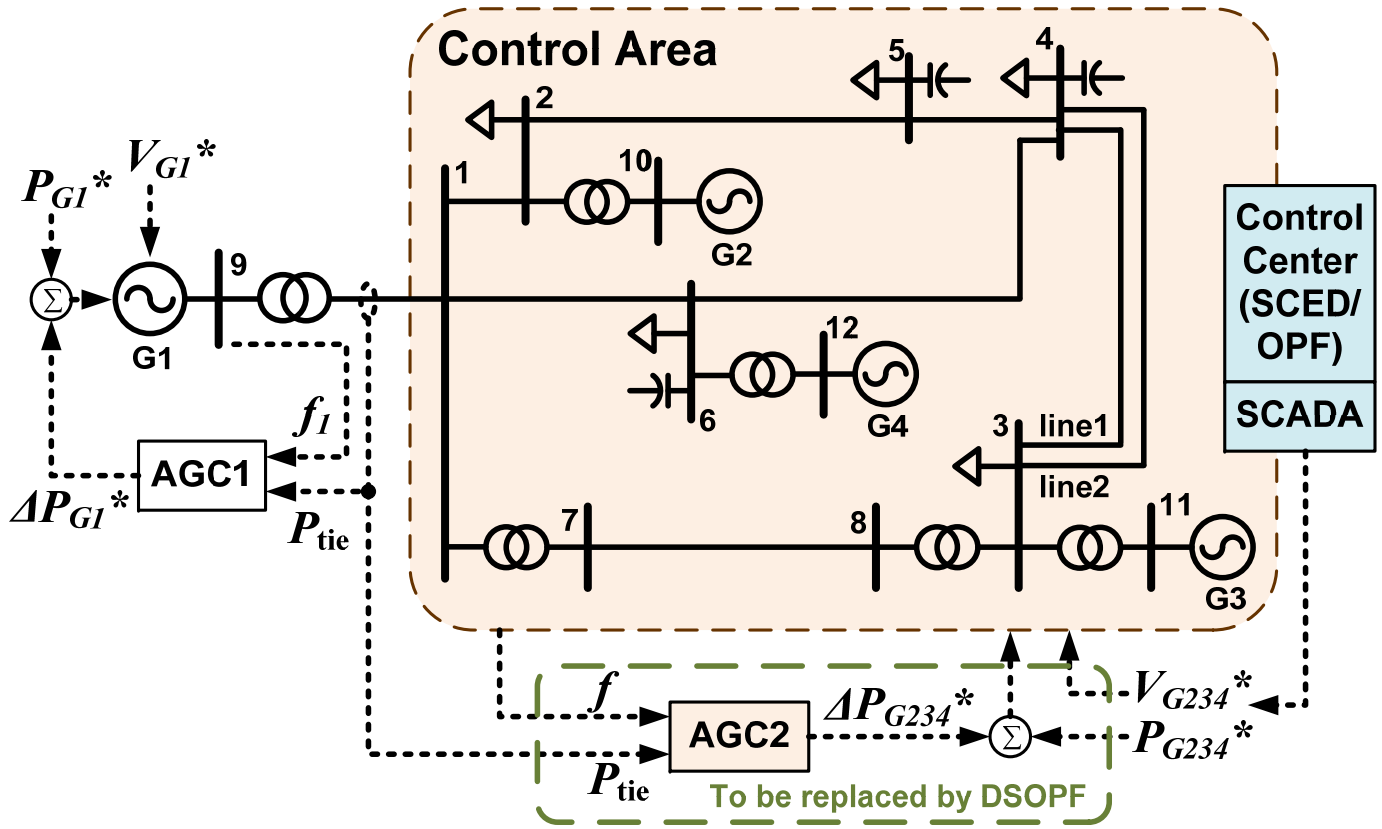

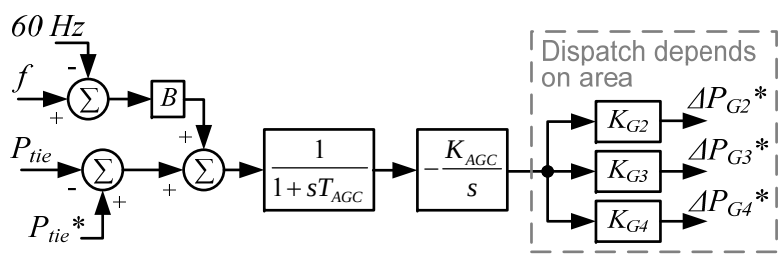

© G. Kumar Venayagamoorthy – A Keynote Presentation at the Fourth International Symposium on Resilient Control Systems, Boise, ID, USA, August 9, 2011

Performance Evaluation of the DSOPF Controller

- The 12-bus system's steady states at D1, D3 and D7, driven by either the AGC2 or the DSOPF control, are compared.

TABLE I. Steady-State Comparison of DSOPF Controller and AGC
(Fuel: k$/h, f: Hz, P_{tie}: MW, P_{loss}: MW, V: pu, S: pu)

	D1			D3			D7	
	AGC2	DSOPF		AGC2	DSOPF		AGC2	DSOPF
Utility	**8.314**	**7.211**	**Utility**	**10.076**	**8.811**	**Utility**	**10.589**	**10.120**
Fuel	43.41	43.24	Fuel	43.92	43.61	Fuel	46.37	45.98
f	60.000	60.001	f	60.000	60.003	f	60.000	60.003
P_{tie}	480.0	479.6	P_{tie}	480.0	478.9	P_{tie}	480.0	479.1
P_{loss}	46.5	40.5	P_{loss}	46.8	39.1	P_{loss}	48.6	41.9
U_{Volt}	**2.362**	**1.142**	U_{Volt}	**3.658**	**2.391**	U_{Volt}	**1.828**	**1.586**
V_4	0.965	0.976	V_4	0.965	0.967	V_4	0.973	0.973
V_5	0.988	1.007	V_5	0.973	1.003	V_5	0.988	1.007
U_{Line}	**1.878**	**1.813**	U_{Line}	**1.838**	**1.754**	U_{Line}	**1.883**	**1.793**
S_{25}	0.75	0.71	S_{25}	0.81	0.75	S_{25}	0.77	0.73
S_{16}	0.80	0.76	S_{16}	0.56	0.56	S_{16}	0.78	0.71
S_{78}	0.67	0.63	S_{78}	0.75	0.68	S_{78}	0.69	0.65
U_{Ctrl}	**0.202**	**0.602**	U_{Ctrl}	**0.192**	**0.668**	U_{Ctrl}	**0.032**	**0.337**

© G. Kumar Venayagamoorthy – A Keynote Presentation at the Fourth International Symposium on Resilient Control Systems, Boise, ID, USA, August 9, 2011

Performance Evaluation – Load Tripping

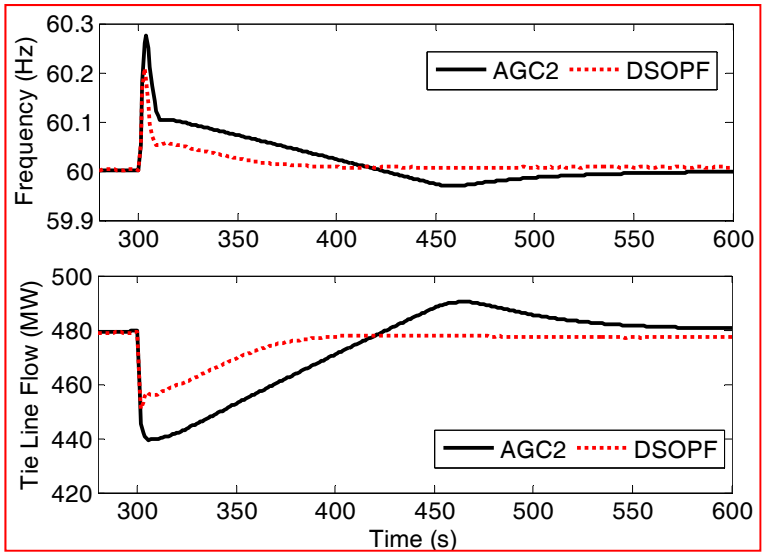

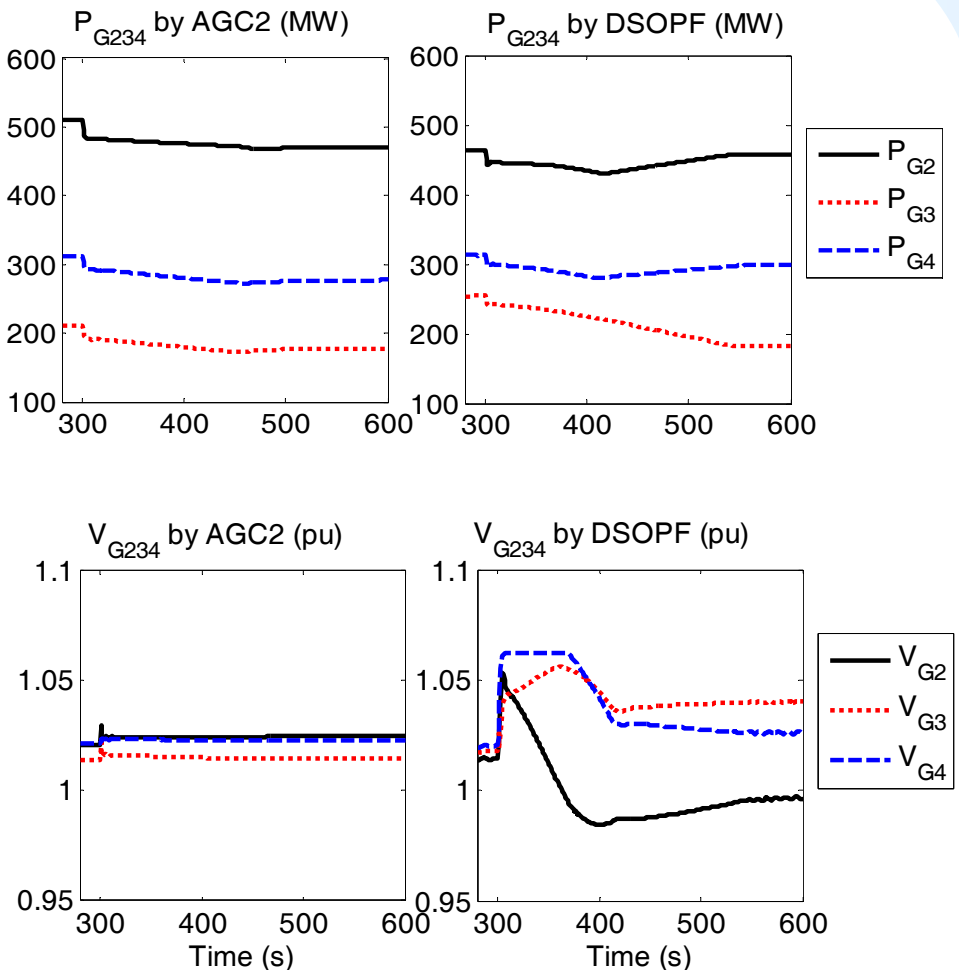

© G. Kumar Venayagamoorthy – A Keynote Presentation at the Fourth International Symposium on Resilient Control Systems, Boise, ID, USA, August 9, 2011

Performance Evaluation – Transmission Line Tripping

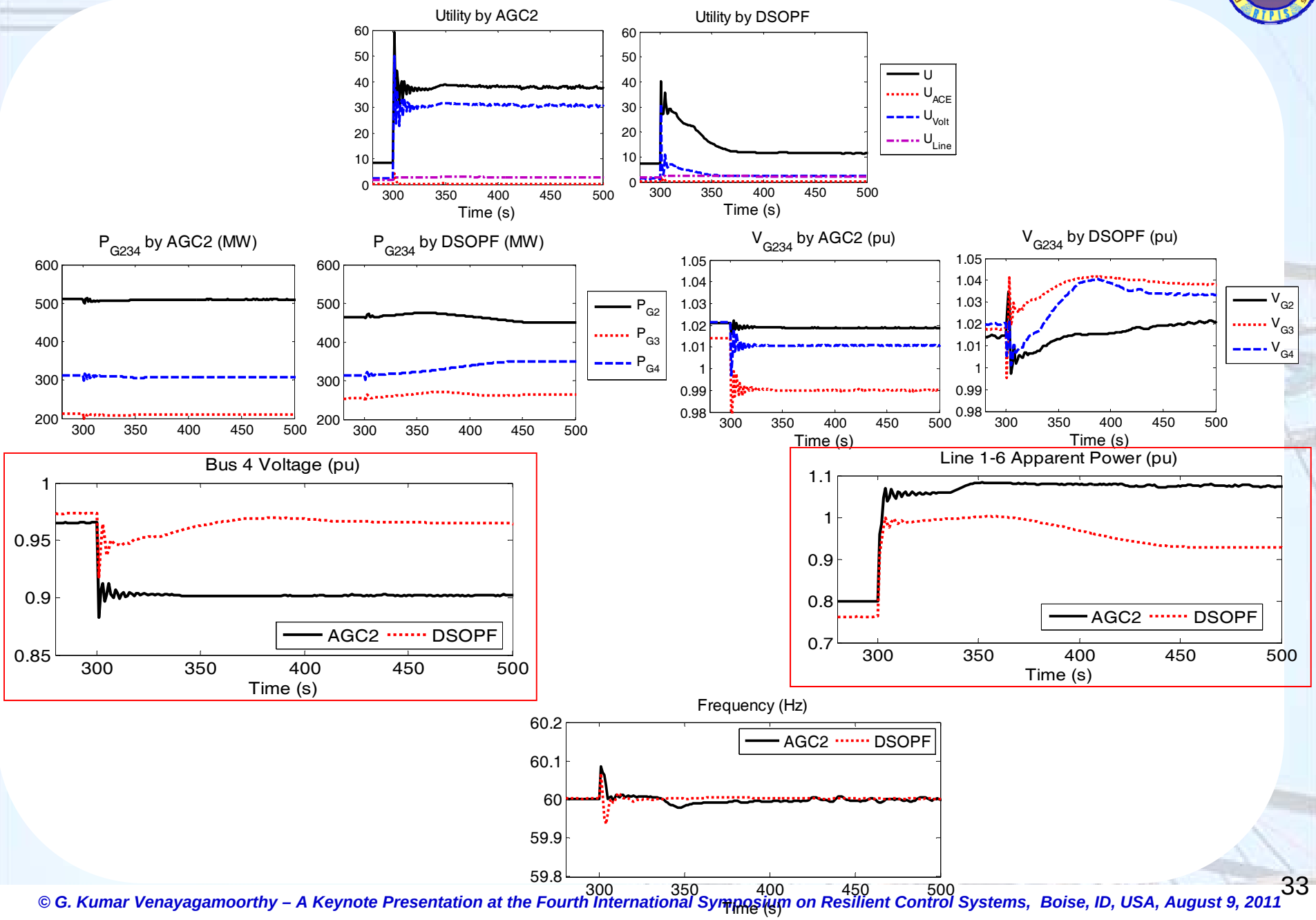

Performance Evaluation – Large Load Variation

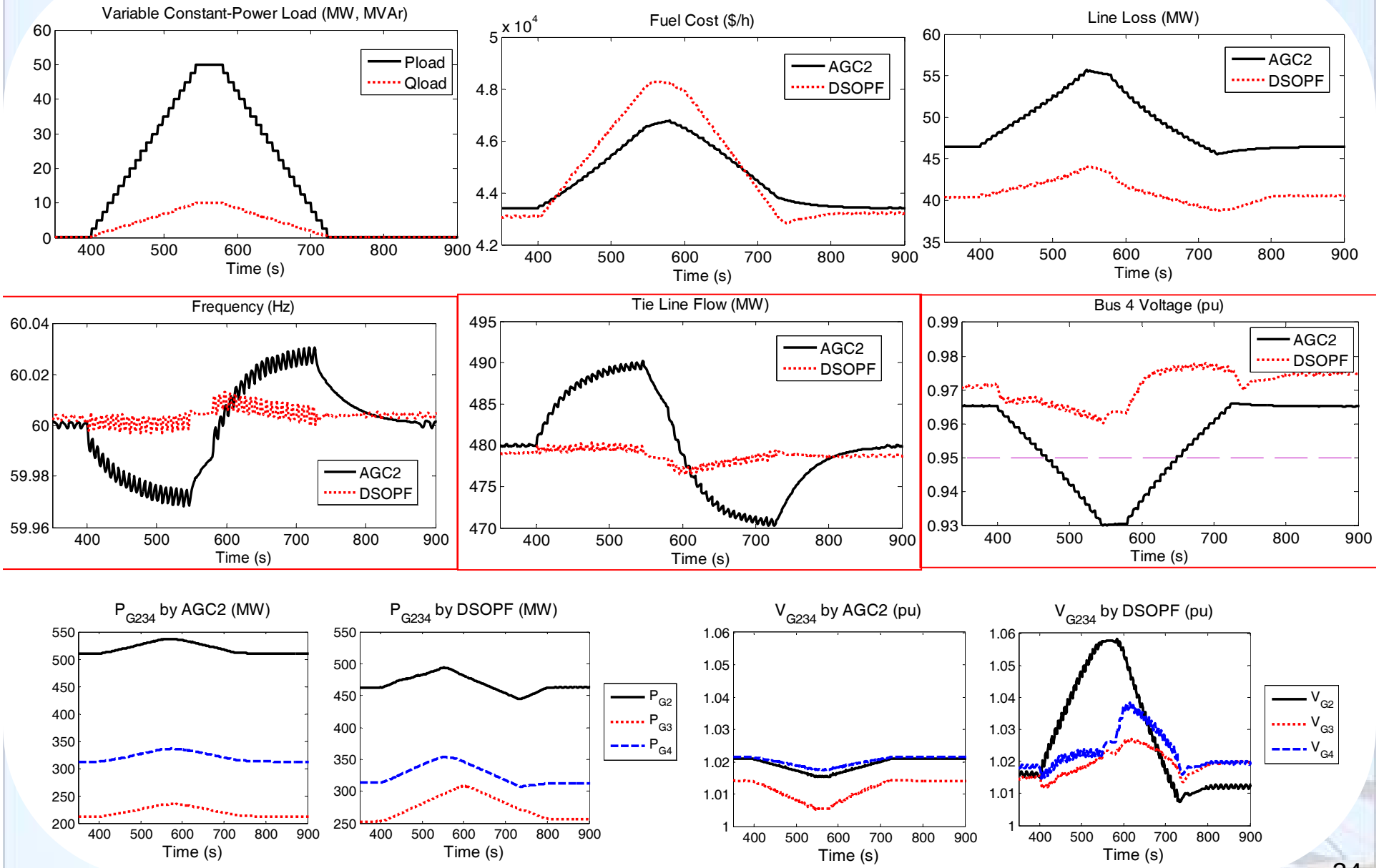

© G. Kumar Venayagamoorthy – A Keynote Presentation at the Fourth International Symposium on Resilient Control Systems, Boise, ID, USA, August 9, 2011

Outline

- Introduction
- Smart Grid
- Emerging Computational Methods
- Wide Area Control Systems
- **Plug-in Electric Vehicles – G2V and V2G Transactions**
- Brain2Grid Project
- Summary

© G. Kumar Venayagamoorthy – A Keynote Presentation at the Fourth International Symposium on Resilient Control Systems, Boise, ID, USA, August 9, 2011

Plug-in Vehicles

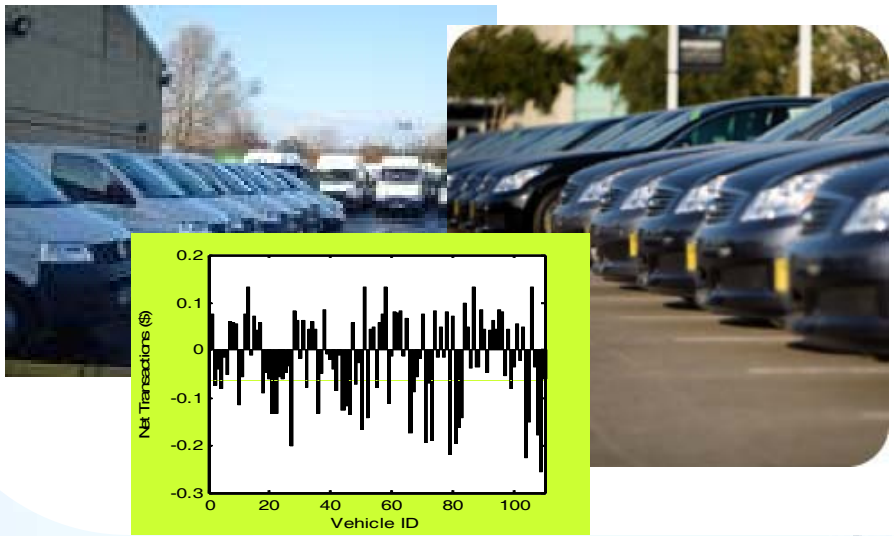

- Integration of large number of power electronics devices to the grid
- Bidirectional power flows – Grid-to-Vehicle (G2V) and Vehicle-to-Grid (V2G)
- Grid services like regulation, spinning reserve
- Power transactions with the varying price, large power swings are inevitable
- Intelligent scheduling for the charging and discharging of the vehicles.

© G. Kumar Venayagamoorthy – A Keynote Presentation at the Fourth International Symposium on Resilient Control Systems, Boise, ID, USA, August 9, 2011

Intelligent Scheduling of EV Storage Capacity for Customer and Utility Profit Maximization

- Maximize profit for vehicles in a SmartPark by scheduling grid transactions based on price curves.
- Find a suitable good solution much quicker than simply trying every possible combination.
- Use an algorithm that is scalable as the number of vehicles, time steps, and constraints used are increased.

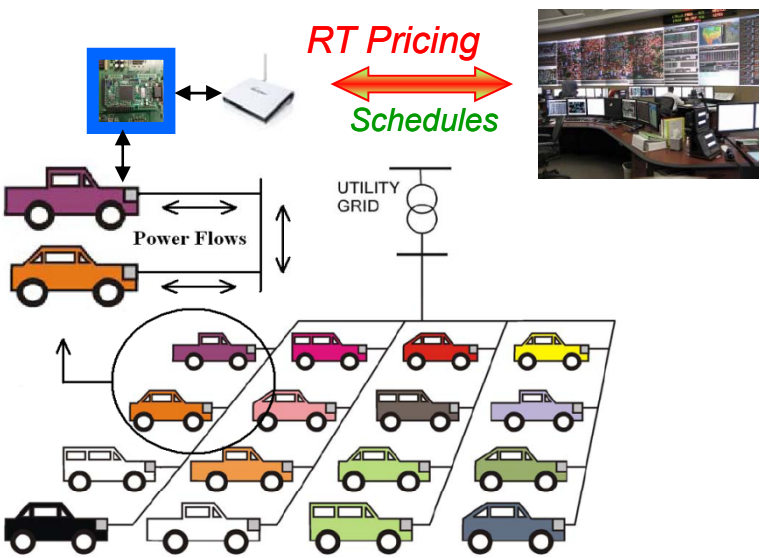

Vehicle ID	Buying Hours	Selling Hours	Hours Present
1	4,7,16	6,14,17	3-17
2	-	15	15-16
3	13	-	12-13
4	16	17	16-17
5	16	17	16-17
6	7	6,14	5-16
7	-	1	1-4
8	**2,7,16**	**4,14,18**	**2-24**
9	7	6,8	5-8
10	7	1,12	1-13

© G. Kumar Venayagamoorthy – A Keynote Presentation at the Fourth International Symposium on Resilient Control Systems, Boise, ID, USA, August 9, 2011

Profit Maximization

Cost (Charge)

$$C = \frac{P(t) * (kWH_{Max} - kWH_{Available})}{Eff_{Charge}} \quad (1)$$

Revenue (Discharge)

$$R = P(t) * (kWH_{Available} - SoC * kWH_{Max}) * Eff_{Discharge} \quad (2)$$

Profit

$$Objective\ Function_i = \sum_{j=ArrTime}^{DepTime} (R_{ij} - C_{ij}) \quad (3)$$

Where,

- C = resulting cost of charging that vehicle
- R = revenue made by selling from that vehicle
- $P(t)$ = electricity price time at t
- t = the optimal buy/sell time
- $kWH_{Available}$ = Kilowatt*Hrs in the battery
- kWH_{Max} = maximum battery capacity
- SoC = desired departure state of charge
- Eff_{Charge} = charging efficiency
- $Eff_{Discharge}$ = inverter efficiency

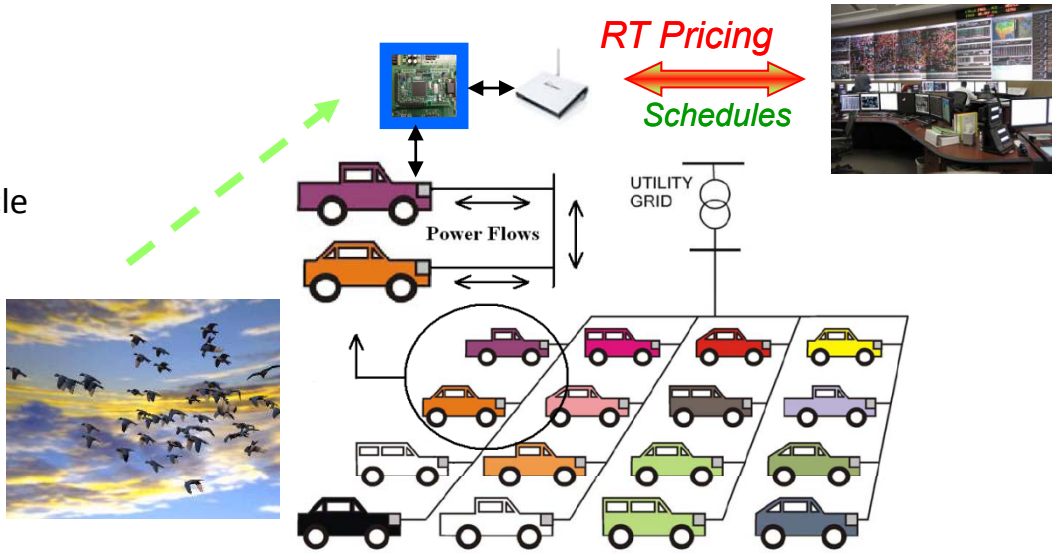

SmartPark Schedule 8/7/2008

Hour	Buying Vehicle ID	Buys	Selling Vehicle ID	Sells
1	-	0	7,10,47	3
2	8	1	39	1
3	25	1	-	0
4	1	1	8	1
5	14	1	22	1
6	34	1	1,6,9,25,49	5
7	**1,6,8,9,10,21,23, 24,27,30,33,36, 41,45,47,48,49**	**17**	-	0
8	40	1	9, 47	2
9	15, 31	2	43, 49	2
10	12,17,37,43,44	5	-	0
11	26, 46	2	21,23,28	3
12	-	0	10,16,24,27,30, 41	6
13	-	0	45	1
14	-	0	**1,6,8,11,12,14,15,17, 26,29,31,33,34,36,37, 40,43,44,46,48**	**20**
15	12, 33	2	2, 32	2
16	**1,4,5,8,14,15,17,19, 20,19,31,34,36,37, 38,40,41,43,45,46, 50**	**21**	-	0
17	13,35,42	3	1,4,5,37,38,46	6
18	-	0	**8,12,13,14,15,17,19, 20,29,31,33,34,35,36, 40,41,42,43,45,50**	**20**
19	-	0	-	0
20	-	0	-	0
21	-	0	-	0
22	-	0	-	0
23	-	0	-	0
24	-	0	-	0

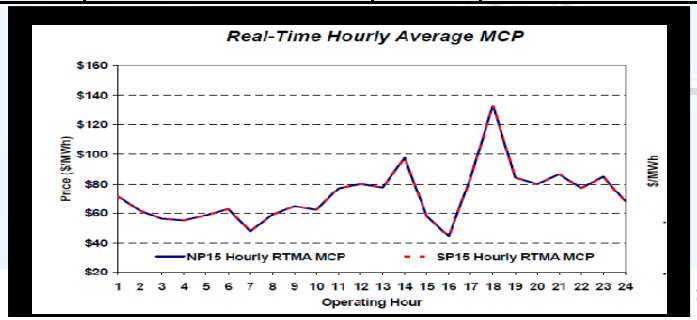

Vehicle Owners' Schedules - 8/7/2008

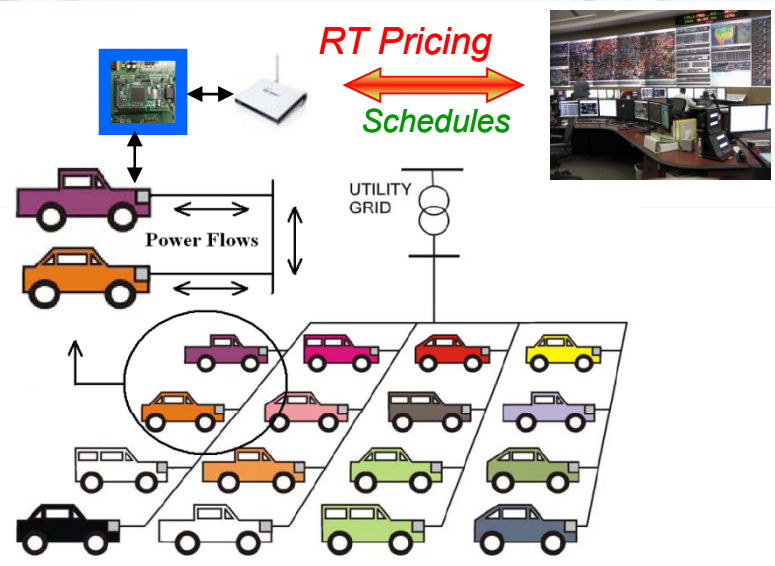

Vehicle ID	Buying Hours	Selling Hours	Hours Present
1	4,7,16	6,14,17	3-17
2	-	15	15-16
3	13	-	12-13
4	16	17	16-17
5	16	17	16-17
6	7	6,14	5-16
7	-	1	1-4
8	**2,7,16**	**4,14,18**	**2-24**
9	7	6,8	5-8
10	7	1,12	1-13

© G. Kumar Venayagamoorthy – A Keynote Presentation at the Fourth International Symposium on Resilient Control Systems, Boise, ID, USA, August 9, 2011

Comparison of 3 Different Price Curves for Identical 50 Vehicle Fleet

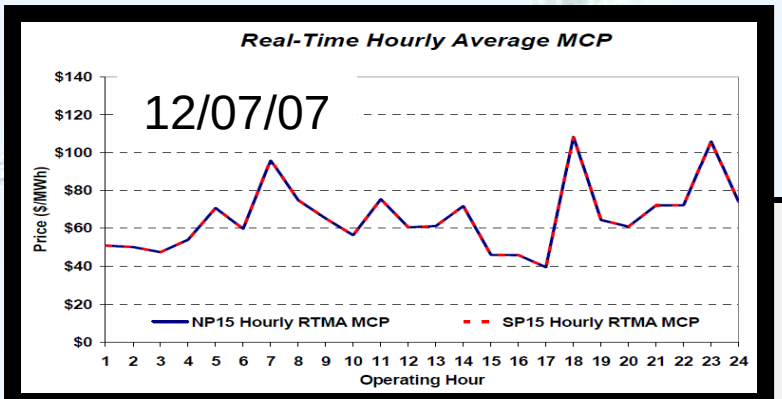

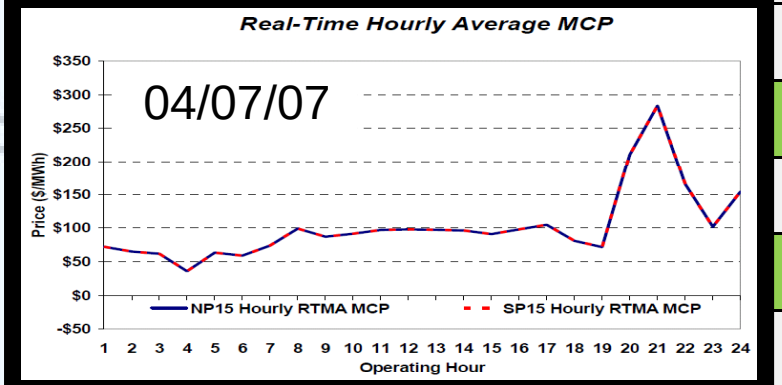

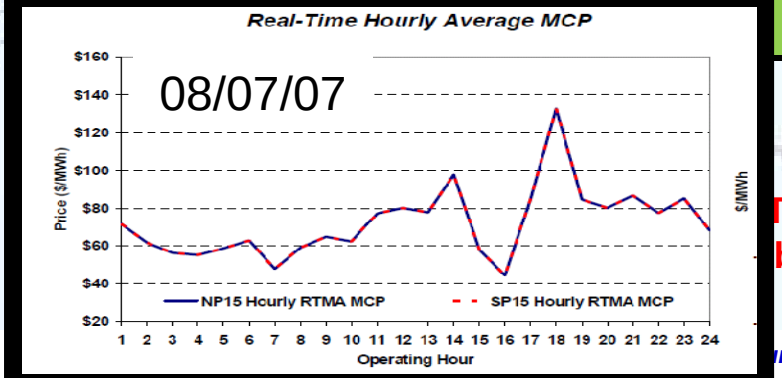

	Power out of SmartPark (MWh)	Net Power Out (MW)	Profit
	1.2412	1.1549	$112.45
	3.6094	0.4191	$190.74
	1.2379	1.1549	$190.65
	3.3845	0.4886	$334.51
	1.2533	1.1549	$128.42
	3.8271	0.3104	$234.22

Electric Vehicle Storage Capacity in a Parking Lot for
Transactions", *IEEE Energy 2030*, Atlanta, GA, USA,
ber 17-18, 2008, pp. 1-8.

Grid Stability

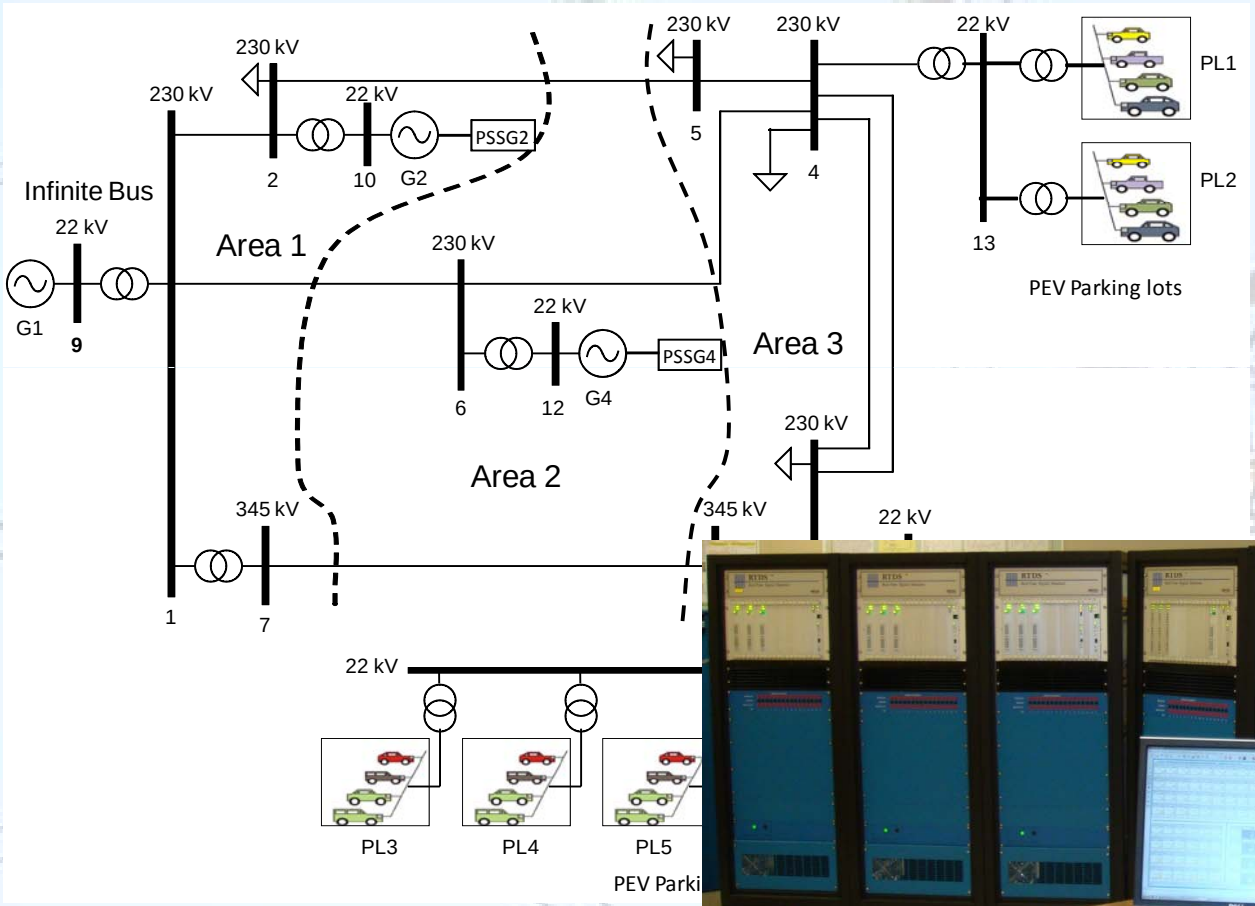

Mitra P, Venayagamoorthy GK, "Wide Area Control for Improving Stability of a Power System with Plug-in Electric Vehicles", *IET Proceedings of Generation, Transmission and Distribution*, Vol. 4, No. 10, 2010, pp. 1151-1163

© G. Kumar Venayagamoorthy – A Keynote Presentation at the Fourth International Symposium on Resilient Control Systems, Boise, ID, USA, August 9, 2011

Grid Stability

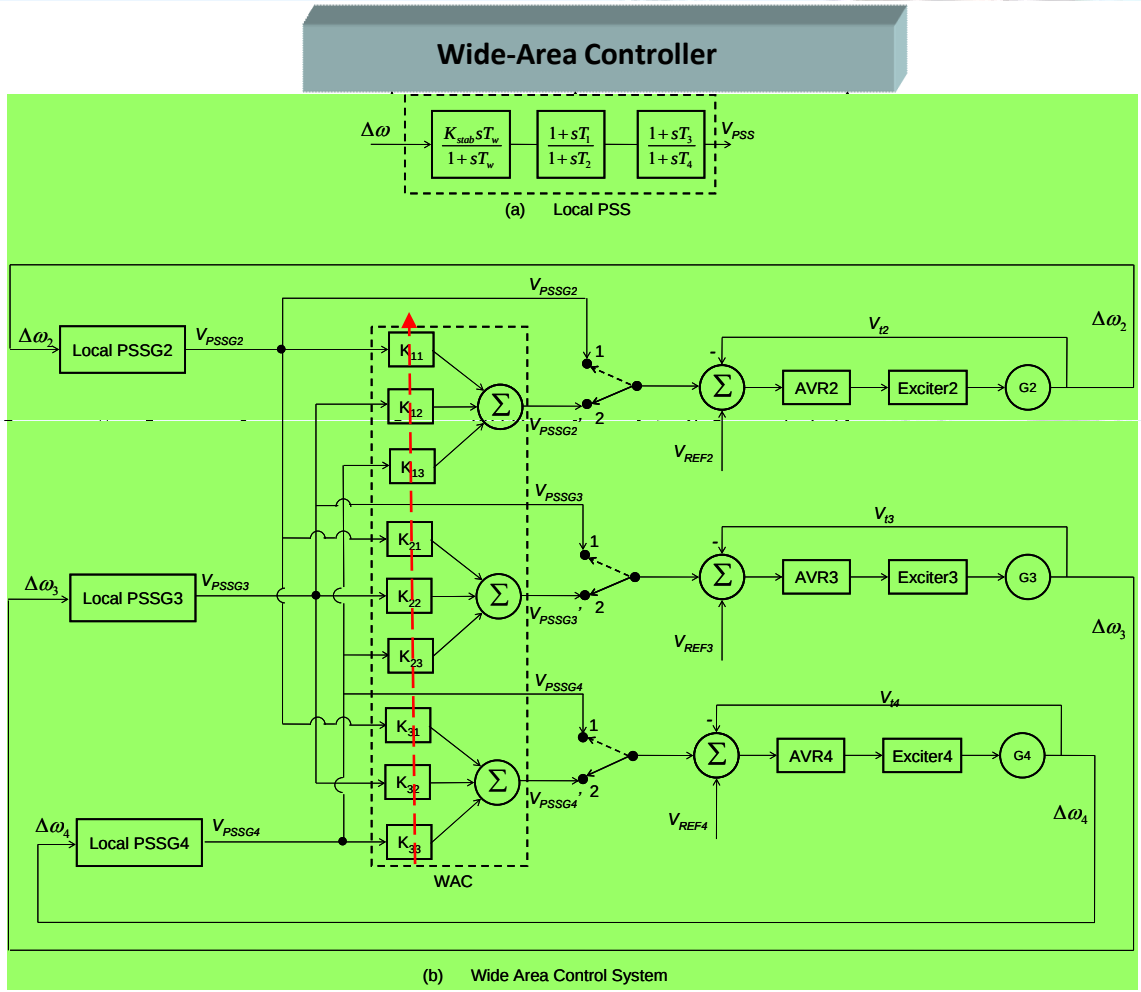

$$J = \sum_{k=1}^{T/\Delta t} \left\{ (\Delta\omega_2(k))^2 + (\Delta\omega_3(k))^2 + (\Delta\omega_4(k))^2 \right\} \cdot \Delta t$$

© G. Kumar Venayagamoorthy – A Keynote Presentation at the Fourth International Symposium on Resilient Control Systems, Boise, ID, USA, August 9, 2011

Impact of SmartPark Sudden Discharging

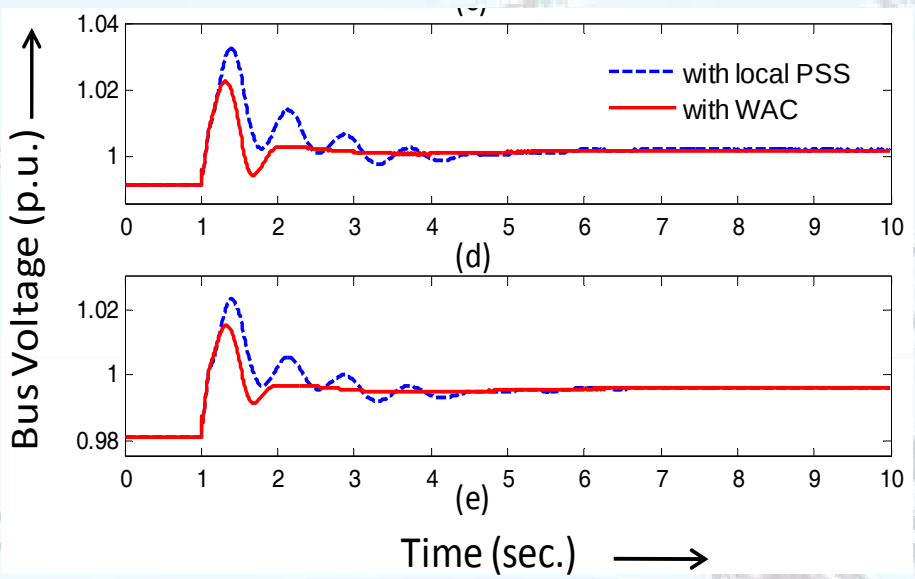

-Voltage at Bus 13,
- Voltage at Bus 14

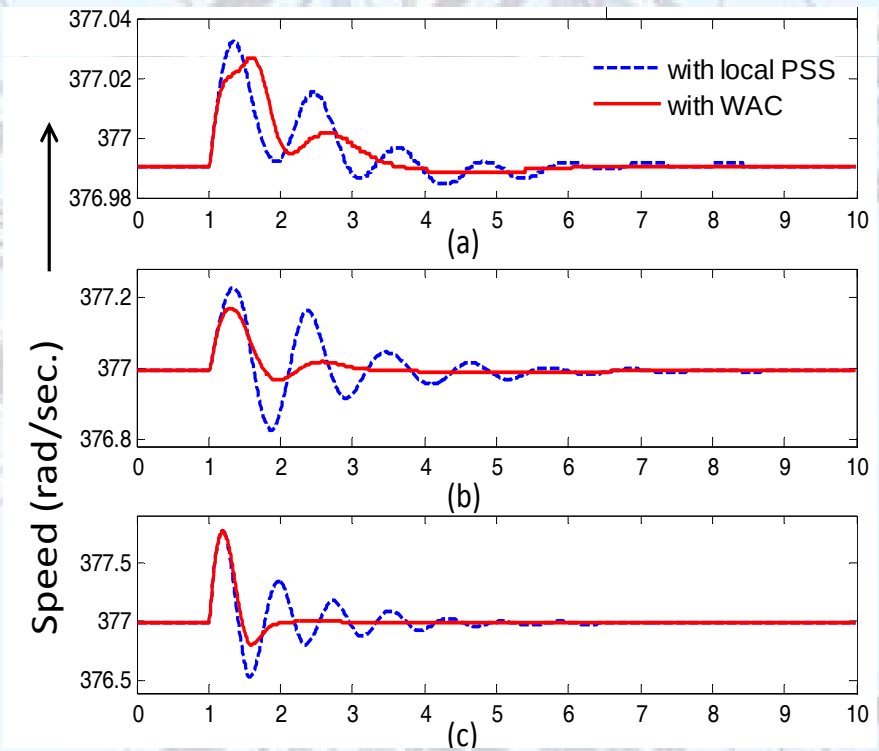

Speeds: (a) G2, (b) G4, (c) G3

© G. Kumar Venayagamoorthy – A Keynote Presentation at the Fourth International Symposium on Resilient Control Systems, Boise, ID, USA, August 9, 2011

Impact of SmartPark for Sudden Transition from Discharging to Charging

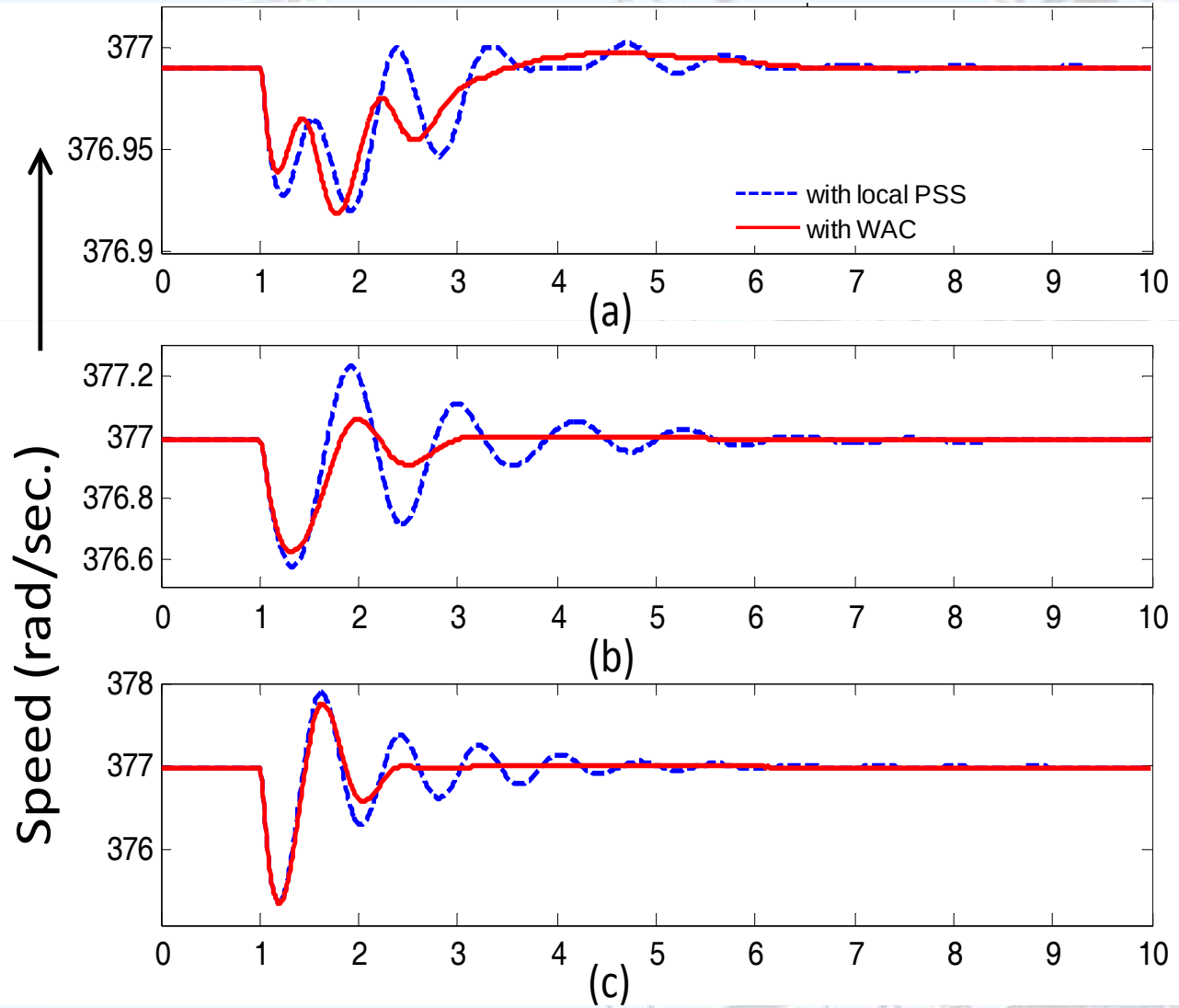

© G. Kumar Venayagamoorthy – A Keynote Presentation at the Fourth International Symposium on Resilient Control Systems, Boise, ID, USA, August 9, 2011

SmartParks for Shock Absorbers for Wind Farms

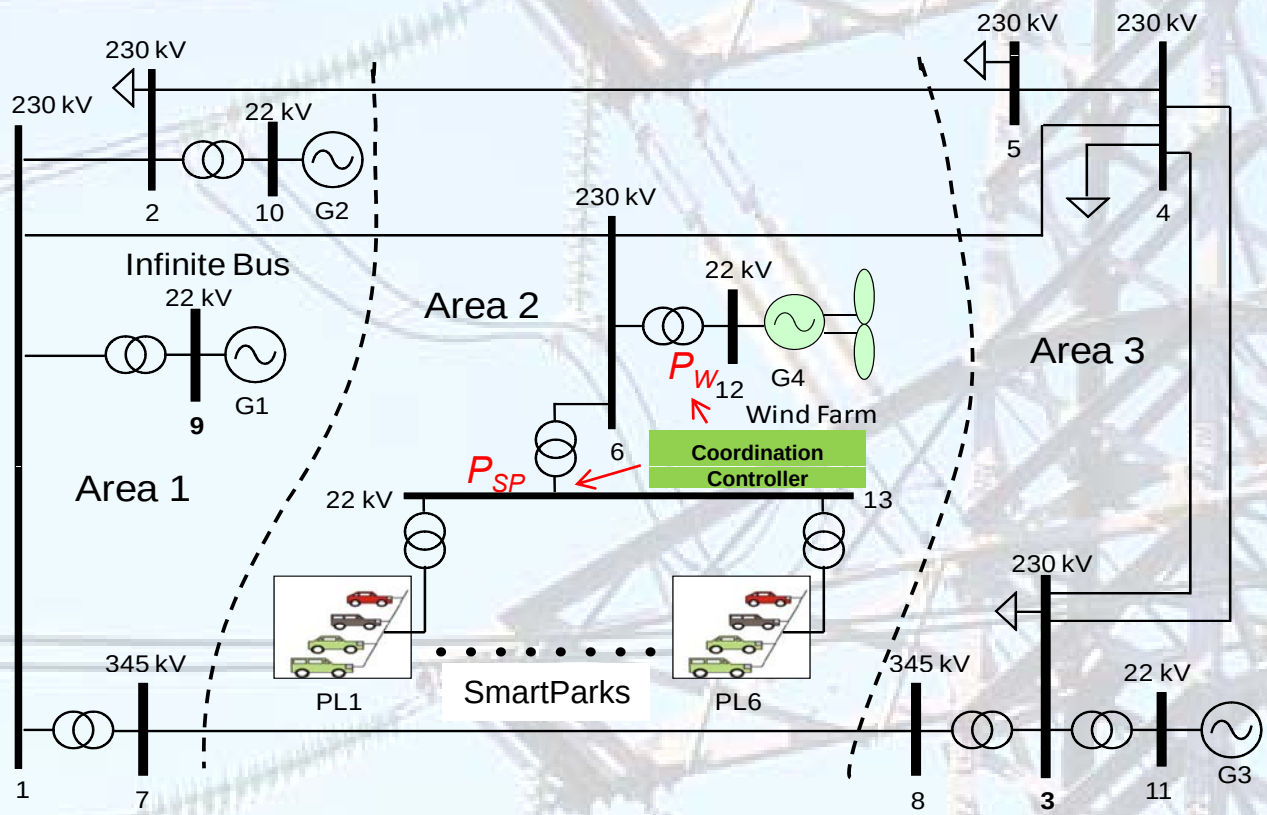

$$P_{SP1\text{-}6} \geq (P_w - P_{wmin}) - (P_{L1\text{-}6max} - P_{L1\text{-}6}), \text{ for} > 0$$

$$P_{SP6\text{-}4} \geq (P_{wmax} - P_w) - (P_{L6\text{-}4max} - P_{L6\text{-}4}), \text{ for} > 0$$

$$P_{SP} = Max\ [P_{SP1\text{-}6}, P_{SP6\text{-}4}]$$

Venayagamoorthy GK, Mitra P, "SmartPark Shock Absorbers for Wind Farms", *IEEE Transactions on Energy Conversion*, to appear

© G. Kumar Venayagamoorthy – A Keynote Presentation at the Fourth International Symposium on Resilient Control Systems, Boise, ID, USA, August 9, 2011

Control of SmartPark as a Shock Absorber

Average wind power

Actual wind power

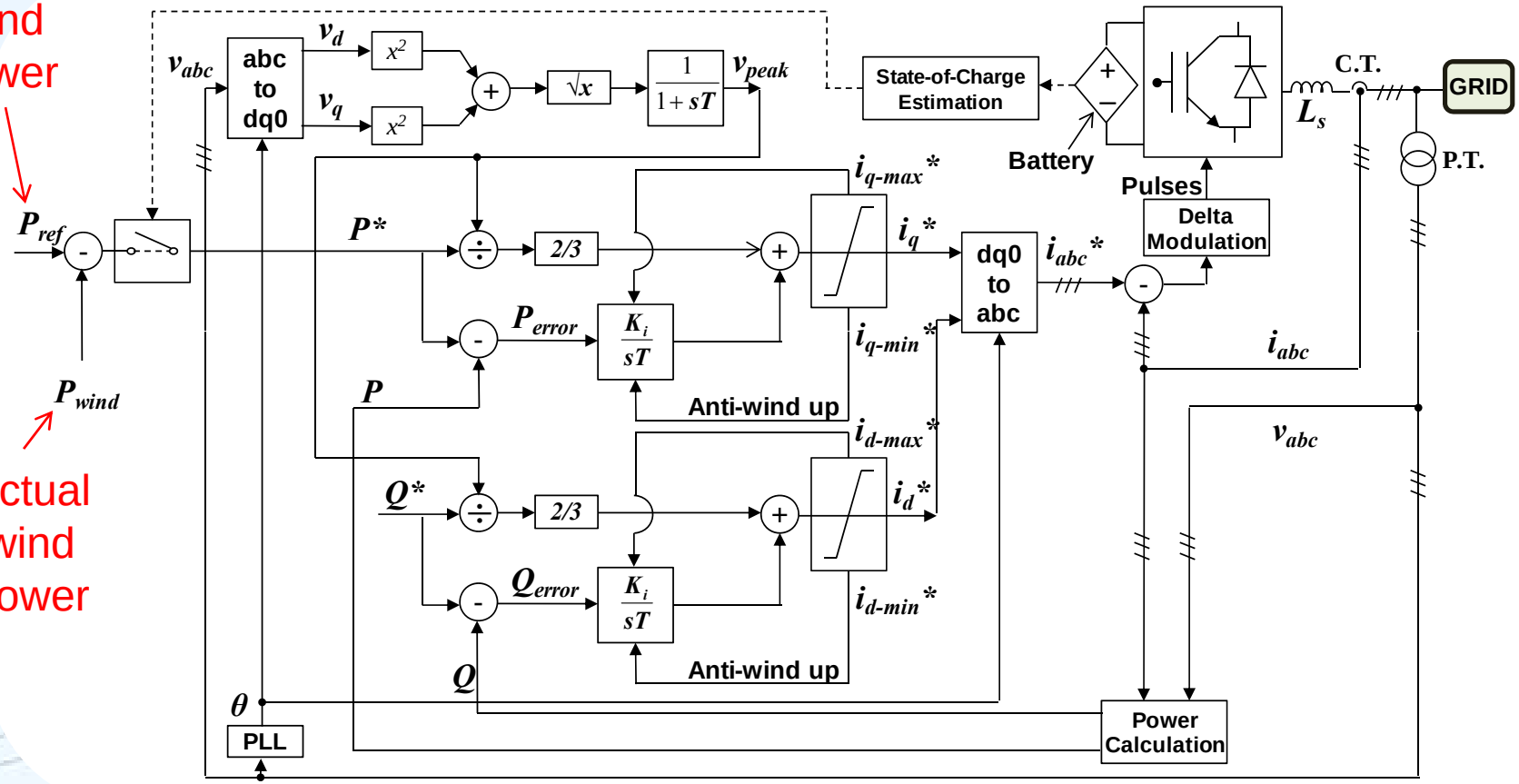

The duration of operation (t_f - t_i) of the shock absorber

$$\int_{t_i}^{t_f} (P_{wind}(t) - P_{ref}) \cdot dt = \int_{q_i}^{q_f} v(q) \cdot dq$$

Coordinated Control Strategy

- With an energy storage device, the limit on wind power generation imposed by pitch control during a wind gust can be relaxed to some extent and an optimal (maximum) utilization of the wind energy can be realized.

- Charging/discharging operations by the SmartParks will depend on the state of charge of the vehicle batteries.

- Therefore, a continuous monitoring of the aggregated state of charge of the parking lots is necessary.

- A continuous monitoring of demand for wind power (commitment) is also needed.

Coordination Control

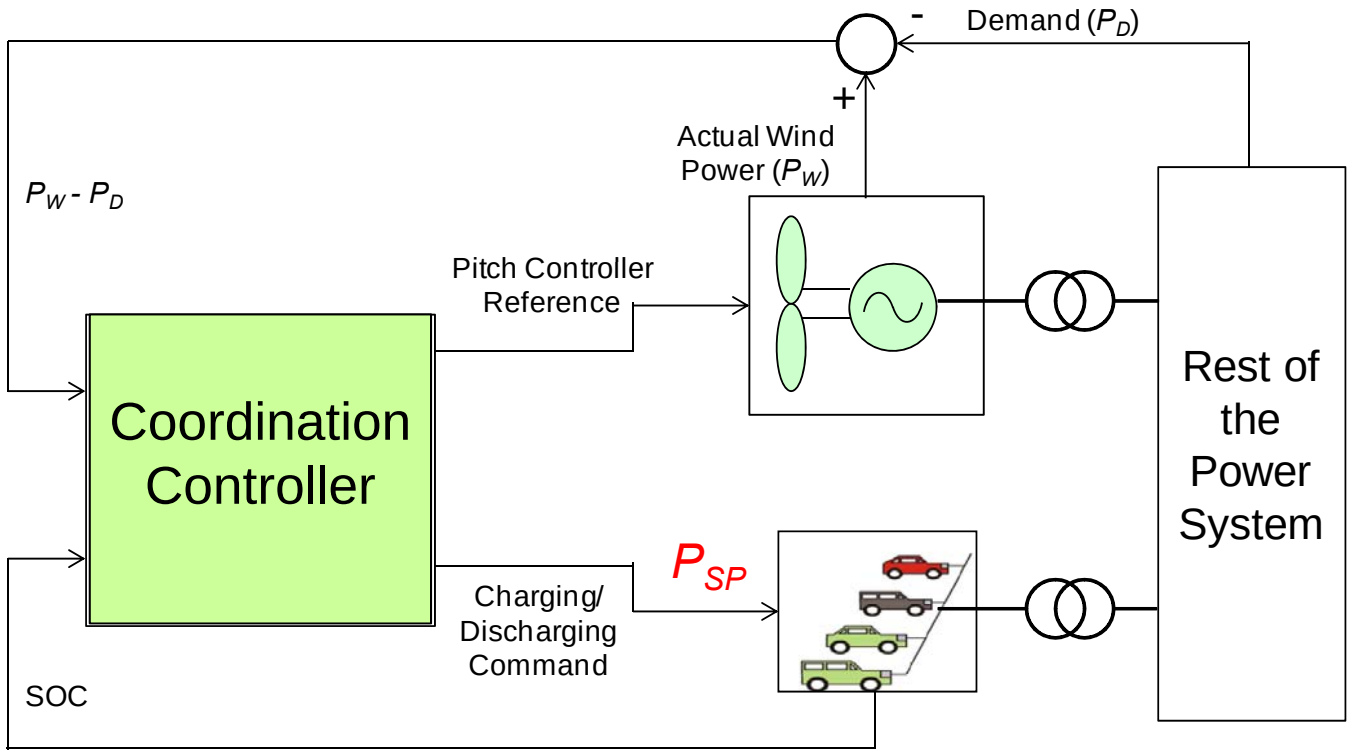

Mitra P, Venayagamoorthy GK, "Intelligent Coordinated Control of a Wind Farm and Distributed SmartParks", *IEEE Industry Application Society Annual Meeting,* Houston, TX, USA, October 3 - 7, 2010

© G. Kumar Venayagamoorthy – A Keynote Presentation at the Fourth International Symposium on Resilient Control Systems, Boise, ID, USA, August 9, 2011

Rule Base for Coordination Control

Rule Base for Pitch Controller Reference

SOC	$P_W - P_D$				
	NB	NS	Z	PS	PB
VL	VH	VH	VH	VH	VH
L	VH	VH	VH	VH	H
M	VH	VH	VH	H	M
H	VH	VH	H	M	L
VH	VH	H	M	L	VL

Rule Base for Power Command of the SmartParks

SOC	$P_W - P_D$				
	NB	NS	Z	PS	PB
VL	PB	PS	Z	NB	NB
L	PB	PS	Z	NB	NB
M	PB	PB	Z	NB	NB
H	PB	PB	Z	NS	NB
VH	PB	PB	Z	NS	NB

If the difference between available wind power and the demand is *negative big* **and** the overall state of charge is *medium* **then** the pitch control reference is *very high* and the SmartPark power command is *positive (discharging) big*.

© G. Kumar Venayagamoorthy – A Keynote Presentation at the Fourth International Symposium on Resilient Control Systems, Boise, ID, USA, August 9, 2011

Laboratory Implementation

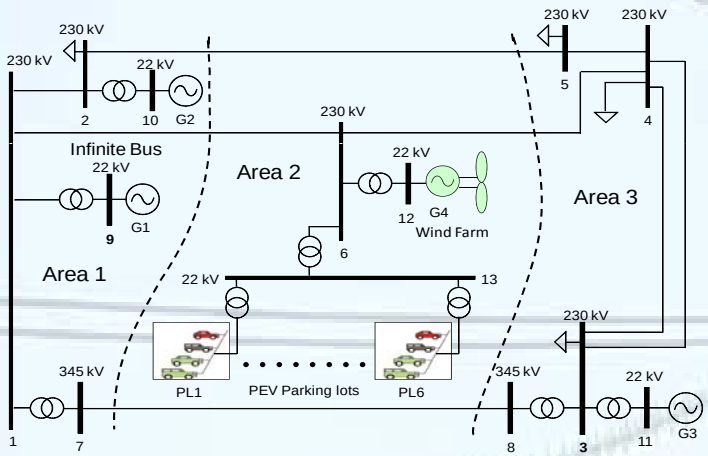

RTDS

Download

Remote Workstation
(Draft and Runtime File)

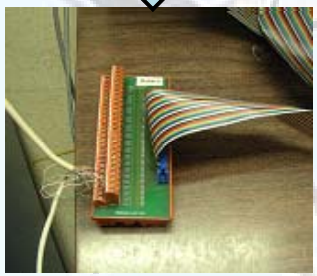

DSP-RTDS Interface

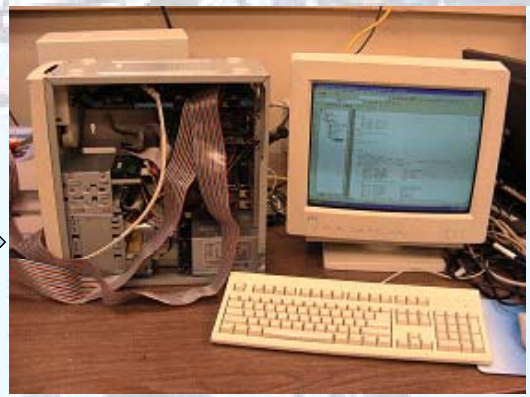

M67 DSP Card
Host PC

Case Study-1

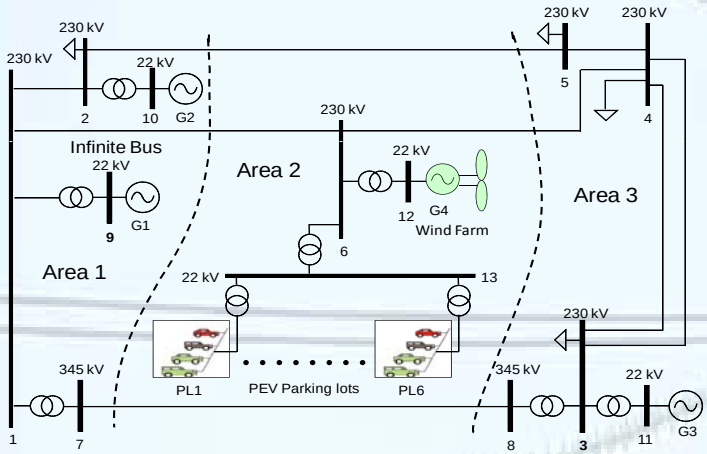

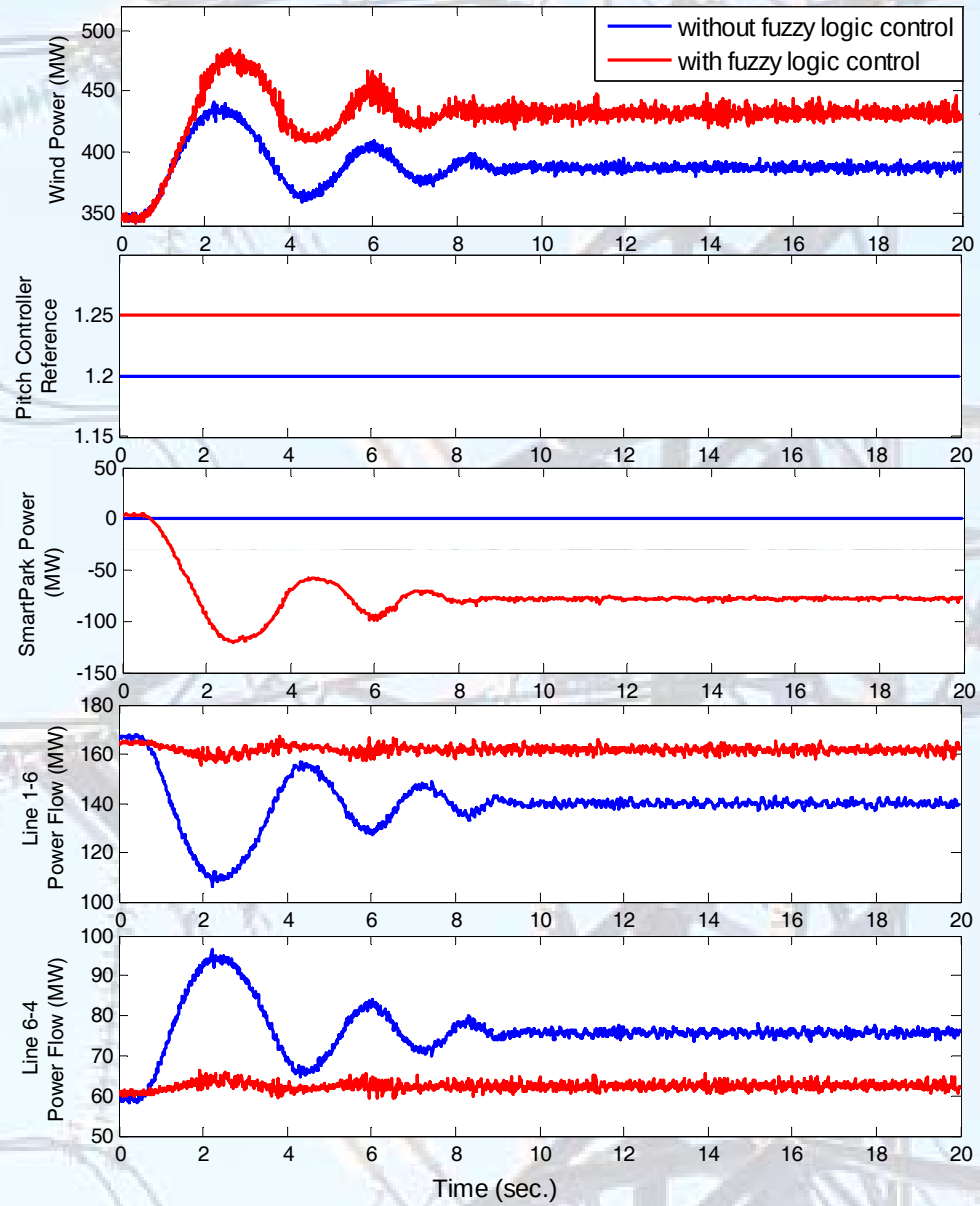

430 MW

390 MW

Performance comparison with and without fuzzy logic controller for demand = 350MW, SOC = 50% & wind speed change from 11 m/s to 13 m/s

© G. Kumar Venayagamoorthy – A Keynote Presentation at the Fourth International Symposium on Resilient Control Systems, Boise, ID, USA, August 9, 2011

Case Study-2

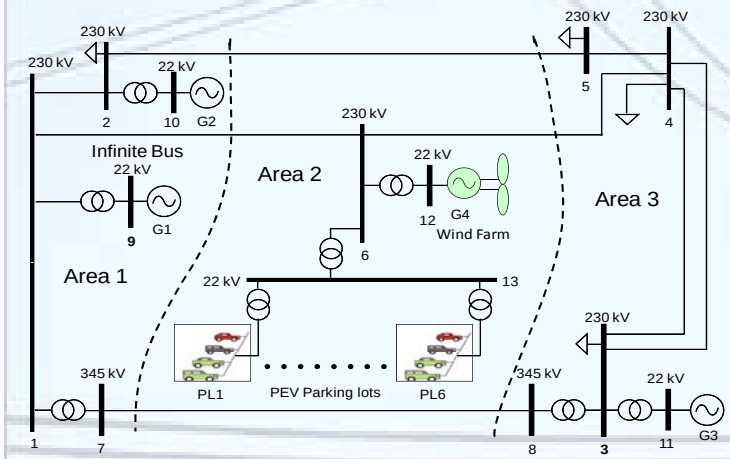

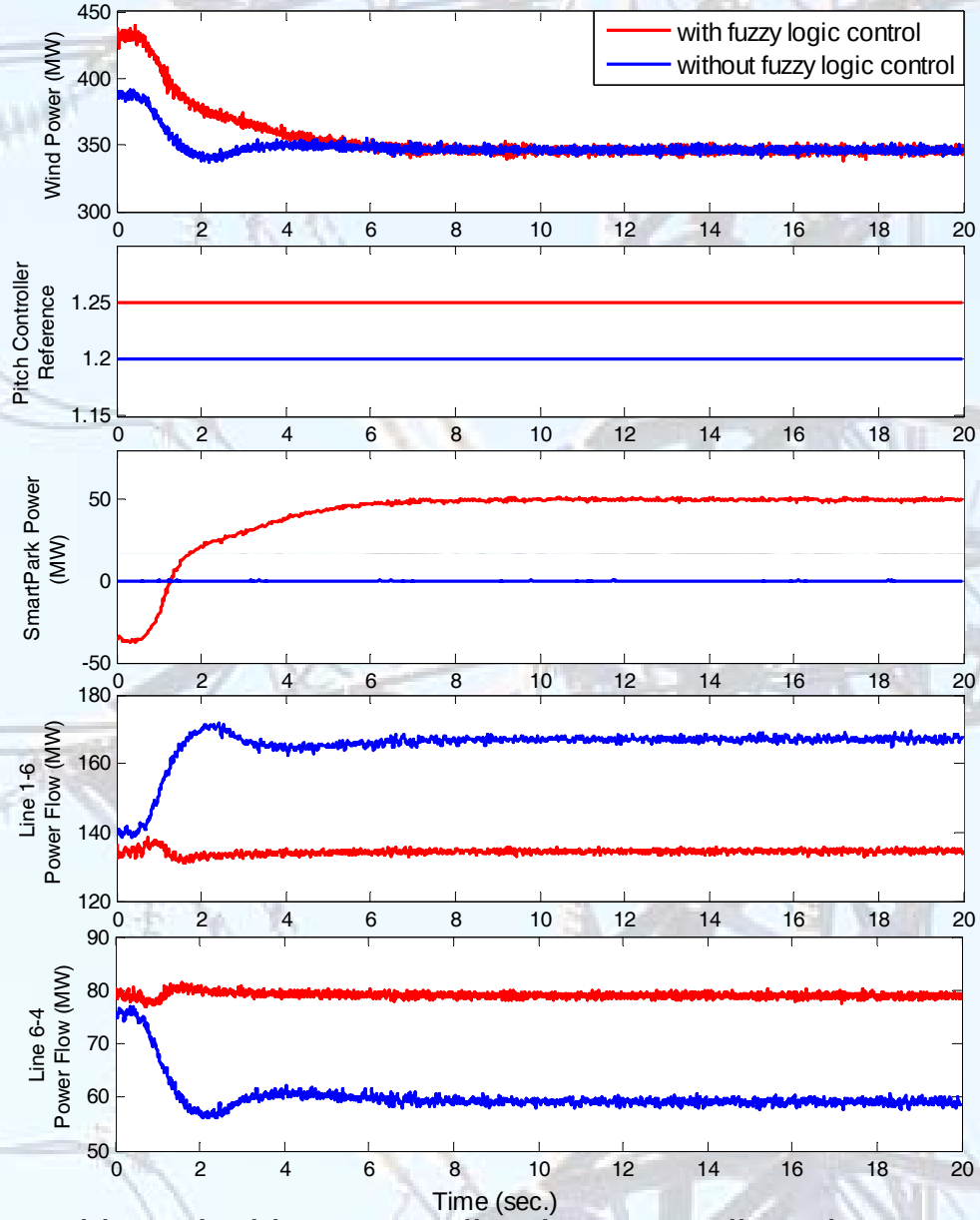

345 MW

Performance comparison with and without coordination controller when demand changed to 400 MW and wind speed dropped from 13 m/s to 11 m/s

© G. Kumar Venayagamoorthy – A Keynote Presentation at the Fourth International Symposium on Resilient Control Systems, Boise, ID, USA, August 9, 2011

Outline

- Introduction
- Smart Grid
- Emerging Computational Methods
- Wide Area Control Systems
- Plug-in Electric Vehicles – G2V and V2G Transactions
- **RTPIS Lab and Brain2Grid Project**
- Summary

© G. Kumar Venayagamoorthy – A Keynote Presentation at the Fourth International Symposium on Resilient Control Systems, Boise, ID, USA, August 9, 2011

RTPIS Lab. Research Activities

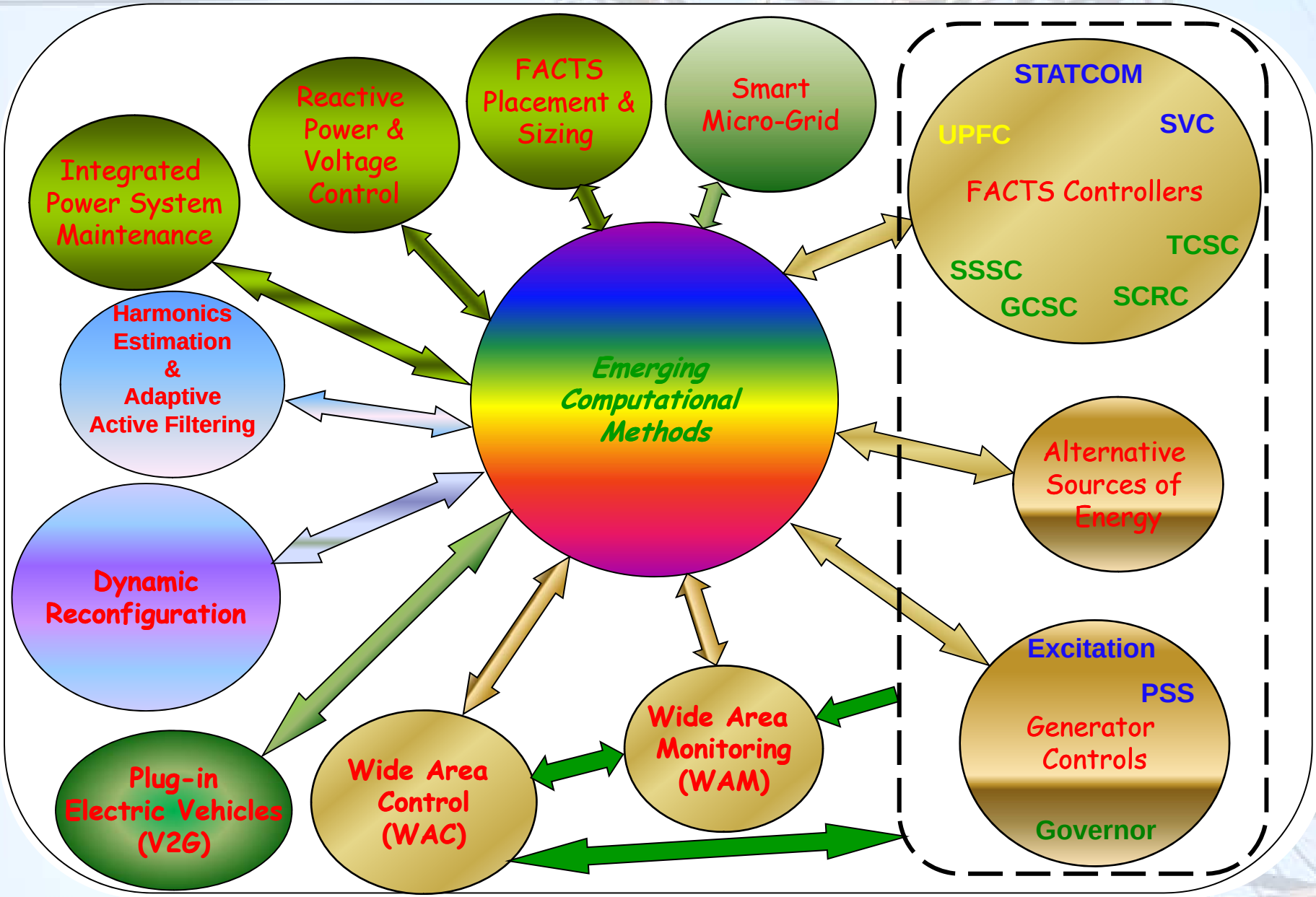

© G. Kumar Venayagamoorthy – A Keynote Presentation at the Fourth International Symposium on Resilient Control Systems, Boise, ID, USA, August 9, 2011

Brain2Grid Project

An award from the NSF Office of the Emerging Frontiers in Research and Innovation (EFRI), under the topic Cognitive Optimization and Prediction: From Neural Systems to Neurotechnology (COPN). The title of the award is “EFRI-COPN: Neuroscience and Neural Networks for Engineering the Future Intelligent Electric Power Grid”.

The overarching goal of this multi-disciplinary project is to infuse more neurobiology into control systems, to make them more brain-like and be able to carry out real-time control of complex systems.

Brain2Grid Project

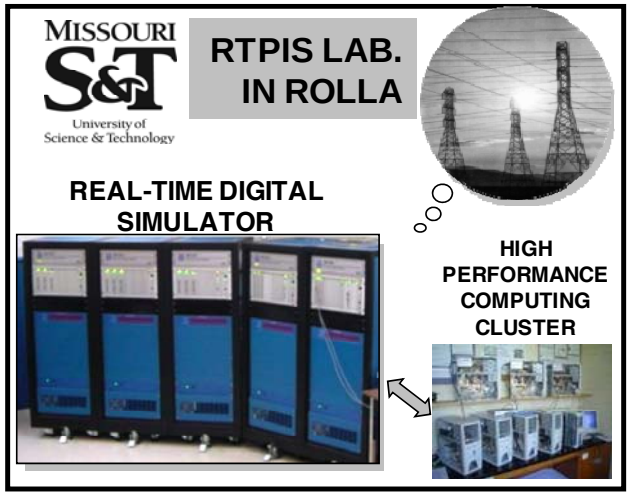

Internet2 Link

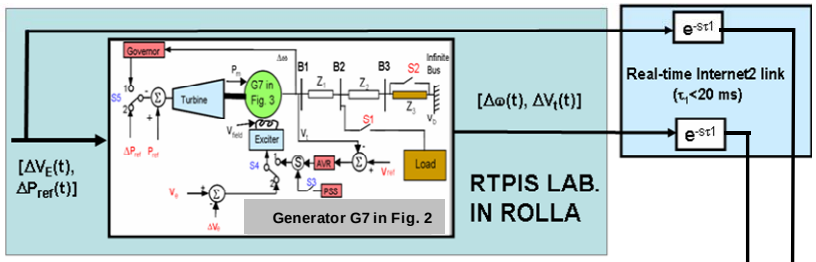

Power network signals

~600 miles

LNN output signals

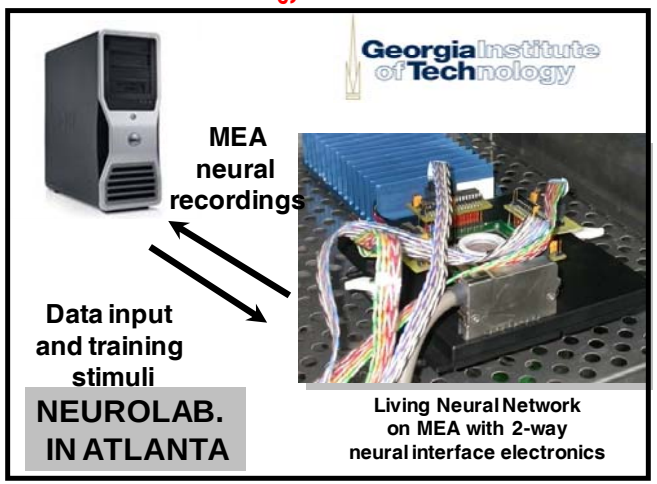

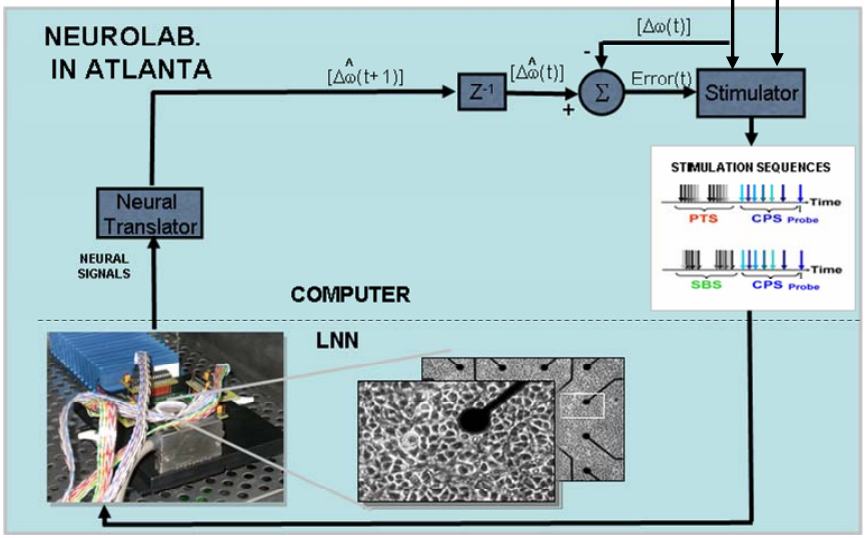

© G. Kumar Venayagamoorthy – A Keynote Presentation at the Fourth International Symposium on Resilient Control Systems, Boise, ID, USA, August 9, 2011

Spiking Neural Networks for System Identification

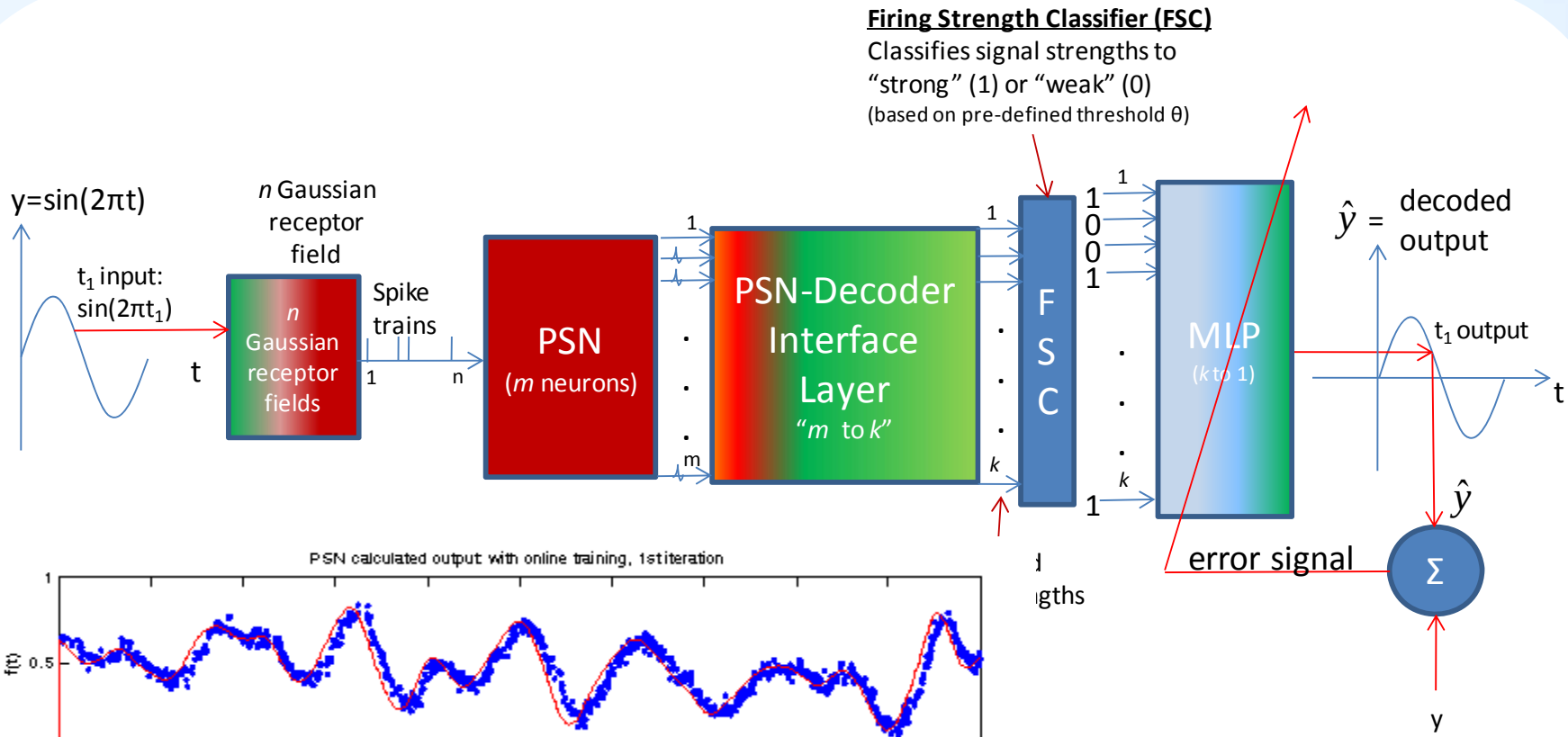

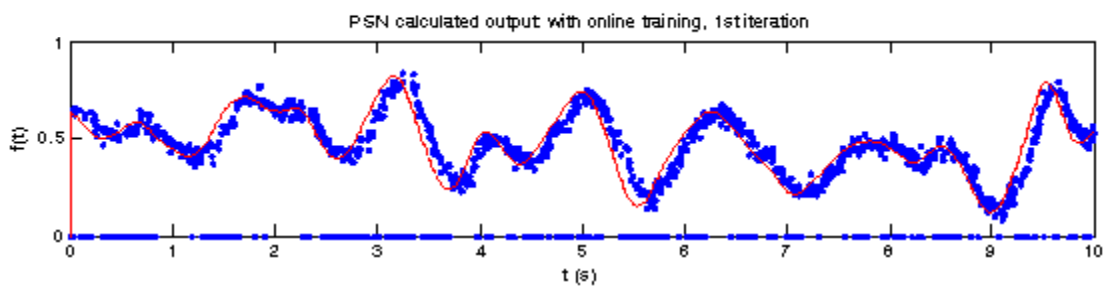

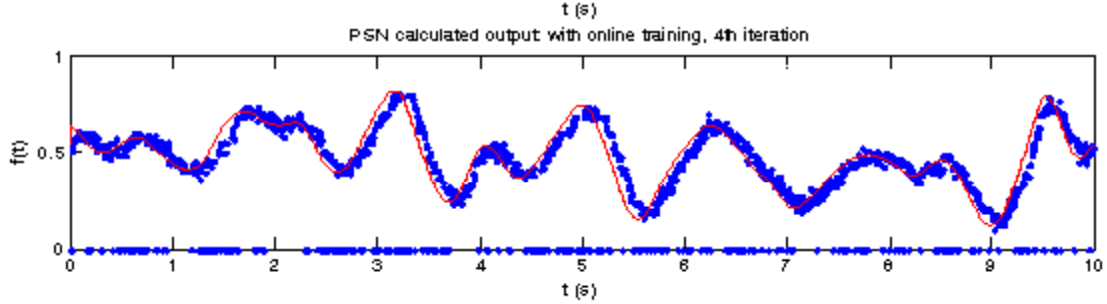

The Challenge … Power Grid

Ganesh Kumar Venayagamoorthy
Missouri University of Science and Technology, USA

Dynamic, Stochastic, Computational and Scalable Technologies for Smart Grids

Abstract—The smart electric power grid will evolve into a very complex adaptive system under semi-autonomous distributed control. Its spatial and temporal complexity, non-convexity, non-linearity, non-stationarity, variability and uncertainties exceed the characteristics found in today's traditional power system. The distributed integration of intermittent sources of energy and plug-in electric vehicles to a smart grid further adds complexity and challenges to its modeling, control and optimization. Innovative technologies are needed to handle the growing complexity of the smart grid and stochastic bidirectional optimal power flows, to maximize the penetration of renewable energy, and to provide maximum utilization of available energy storage, especially plug-in electric vehicles.

Smart grids will need to be monitored continuously to maintain stability, reliability and efficiency under normal and abnormal operating conditions and disturbances. A combination of capabilities for system state prediction, dynamic stochastic power flow, system optimization, and solution checking will be necessary. The optimization and control systems for a smart-grid environment will require a computational systems thinking machine to handle the uncertainties and variability that exist. The importance and contributions of the computational intelligence field for developing the dynamic, stochastic, computational, and scalable technologies needed for sense-making, situational awareness, control and optimization in smart grids are presented in this paper.

I. Introduction

The North American electric power grid built several decades ago is the world's largest single machine ever built by man, and it is ranked as the number one greatest achievement of the 20th century by the US National Academy of Engineering (NAE). It is a complex adaptive system under semi-autonomous control. The complexity and interconnectivity of the electric power grid increases with all forms of distributed integration of renewable sources of energy and energy storage. The smart grid's growing complexity requires different approaches to traditional methods of modeling, control and optimization in power systems. These new approaches need either to be augmented with existing ones or completely replaced in some cases, providing capabilities for rapid adaptation, dynamic foresight, sense-making, situational awareness, fault-tolerance and robustness to disturbances and randomness.

The NAE committee on Engineering Grand Challenges has identified 14 areas awaiting solutions in the 21st century.

Digital Object Identifier 10.1109/MCI.2011.941588
Date of publication: 14 July 2011

1556-603X/11/$26.00 ©2011 IEEE

DSCS Tech … s
- **D**ynamic
- **S**tochastic
- **C**omputation … jectives
- **S**calable

Dynamic, Stochastic, Computational and Scalable Technologies for Smart Grids, *IEEE Computational Intelligence Magazine* (Special Issue on Smart Grids), pp. 22- 35, August 2011

© G. Kumar Venayagamoorthy – A Keynote Presentation at the Fourth International Symposium on Resilient Control Systems, Boise, ID, USA, August 9, 2011

Computational Systems Thinking

- Computational methods and models enable us to solve complex problems that seem impossible otherwise.
- Systems thinking is an approach to understanding how components in a system influence each other within an entirety and where solutions are derived based on coupled dynamics.
- Computational thinking builds on the power and limits of computing processes.

© G. Kumar Venayagamoorthy – A Keynote Presentation at the Fourth International Symposium on Resilient Control Systems, Boise, ID, USA, August 9, 2011

Computational Systems Thinking Machine (CSTM)

- To handle an evolving, uncertain, variable and complex smart grid – three strands of thinking are needed for
  - Sense-making
  - Decision-making
  - Adaptation

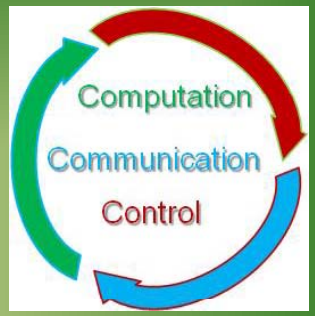

- In the center of all these strands exist a 'real-time wealth of knowledge'
  - Continuous refinement
  - Learns and unlearns

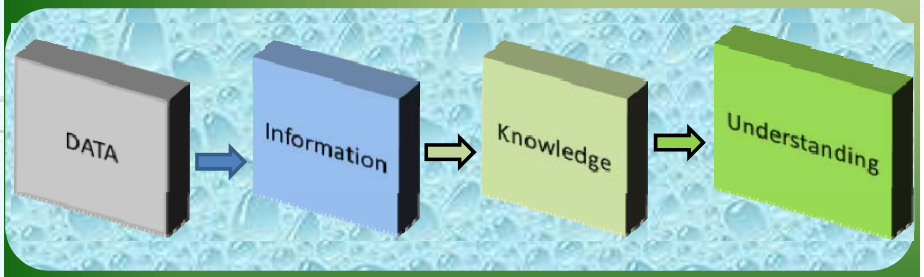

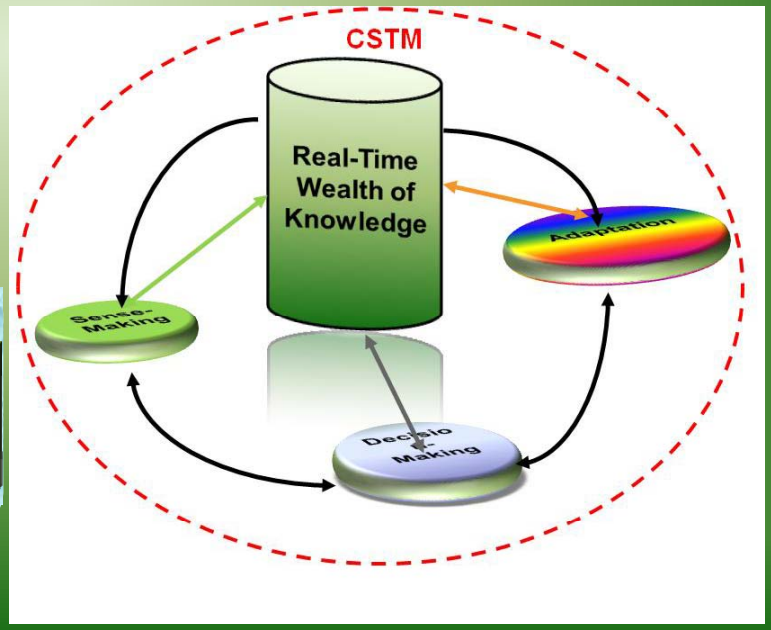

Co-existence of CSTMs

- Co-existence of CSTMs is essential for smart grid operations
  - Harmony
  - Coordination
  - Communication
  - Collaborate.

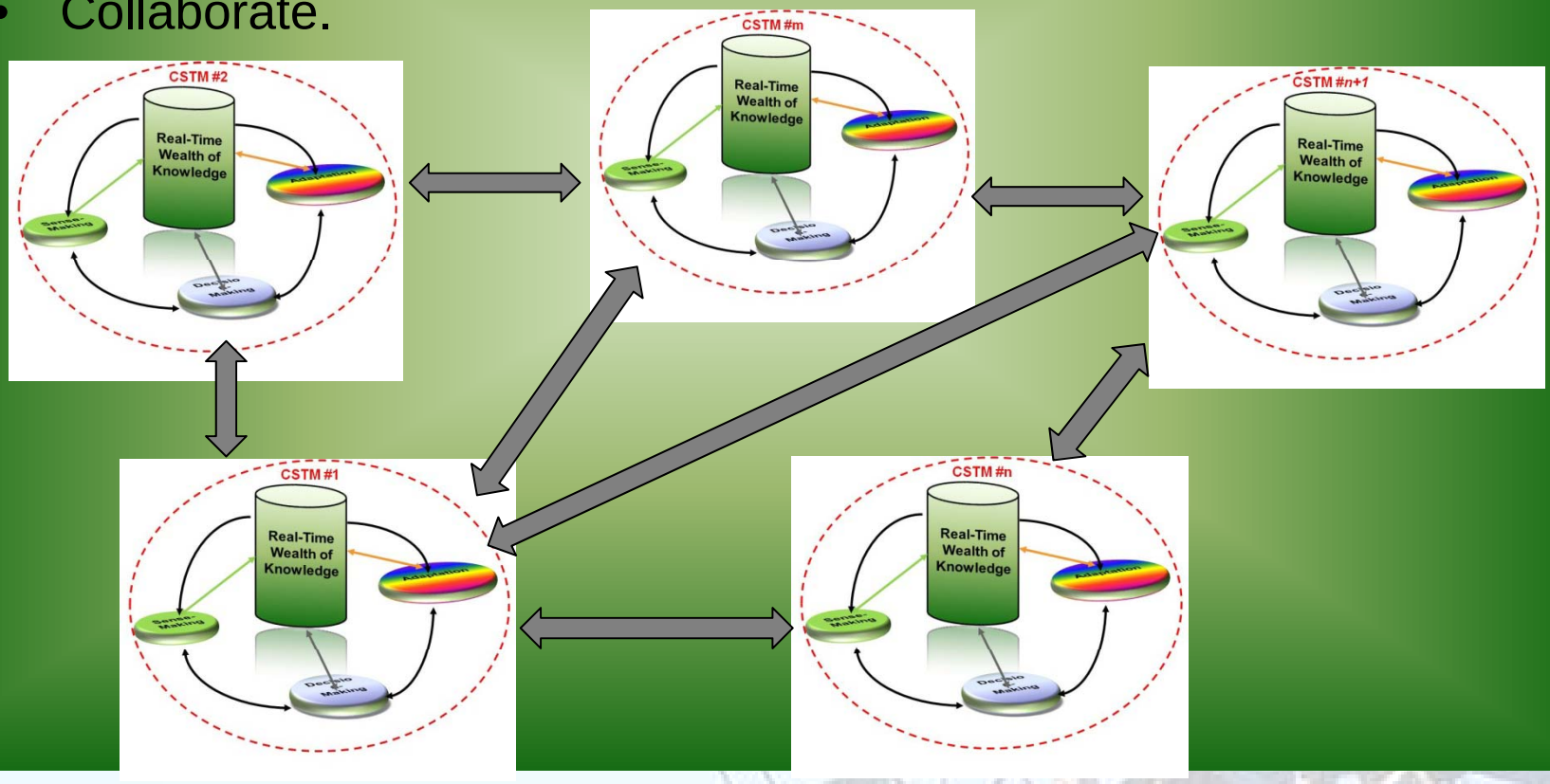

© G. Kumar Venayagamoorthy – A Keynote Presentation at the Fourth International Symposium on Resilient Control Systems, Boise, ID, USA, August 9, 2011

Cellular Neural Networks for WAMS

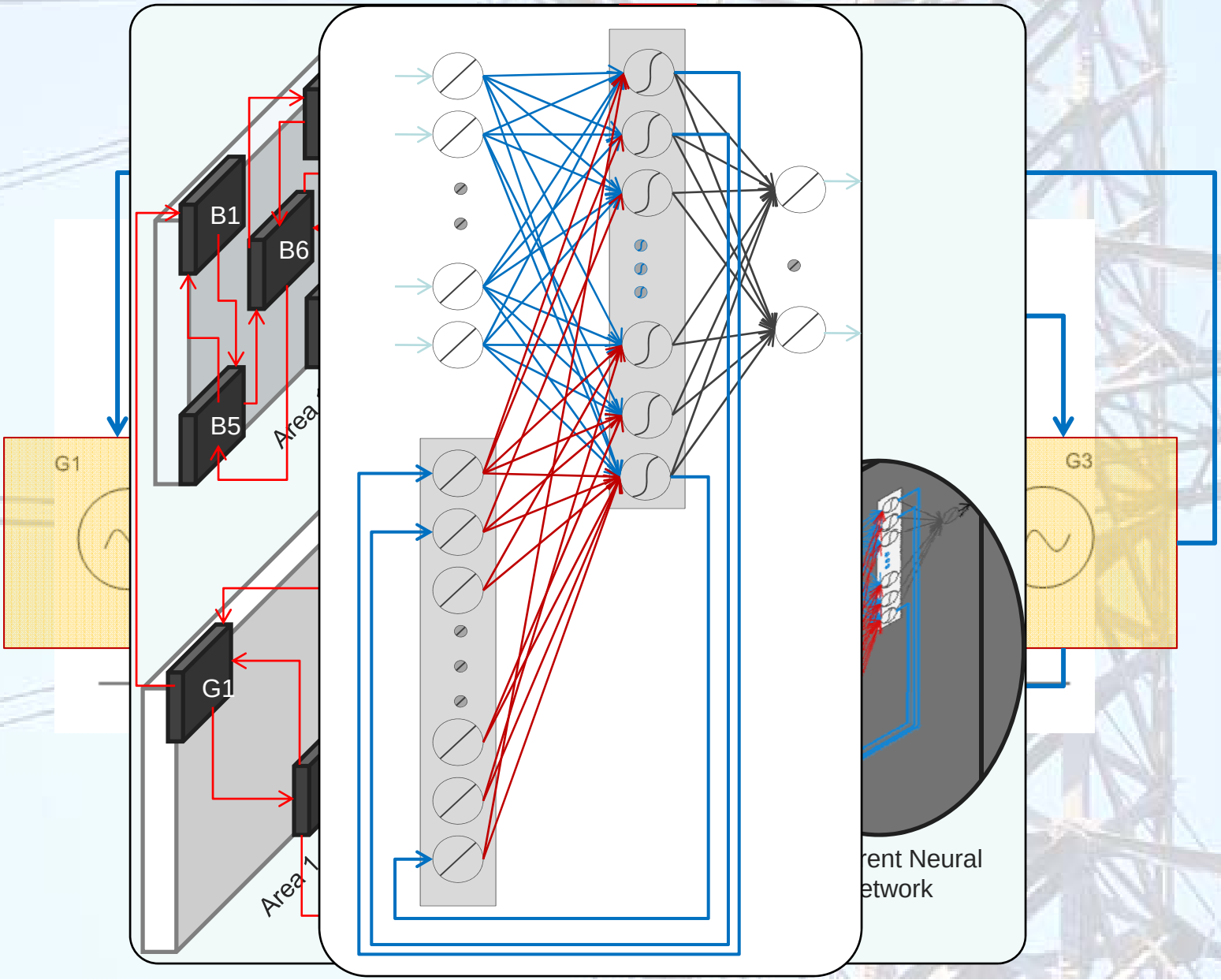

CNN Based WAMS

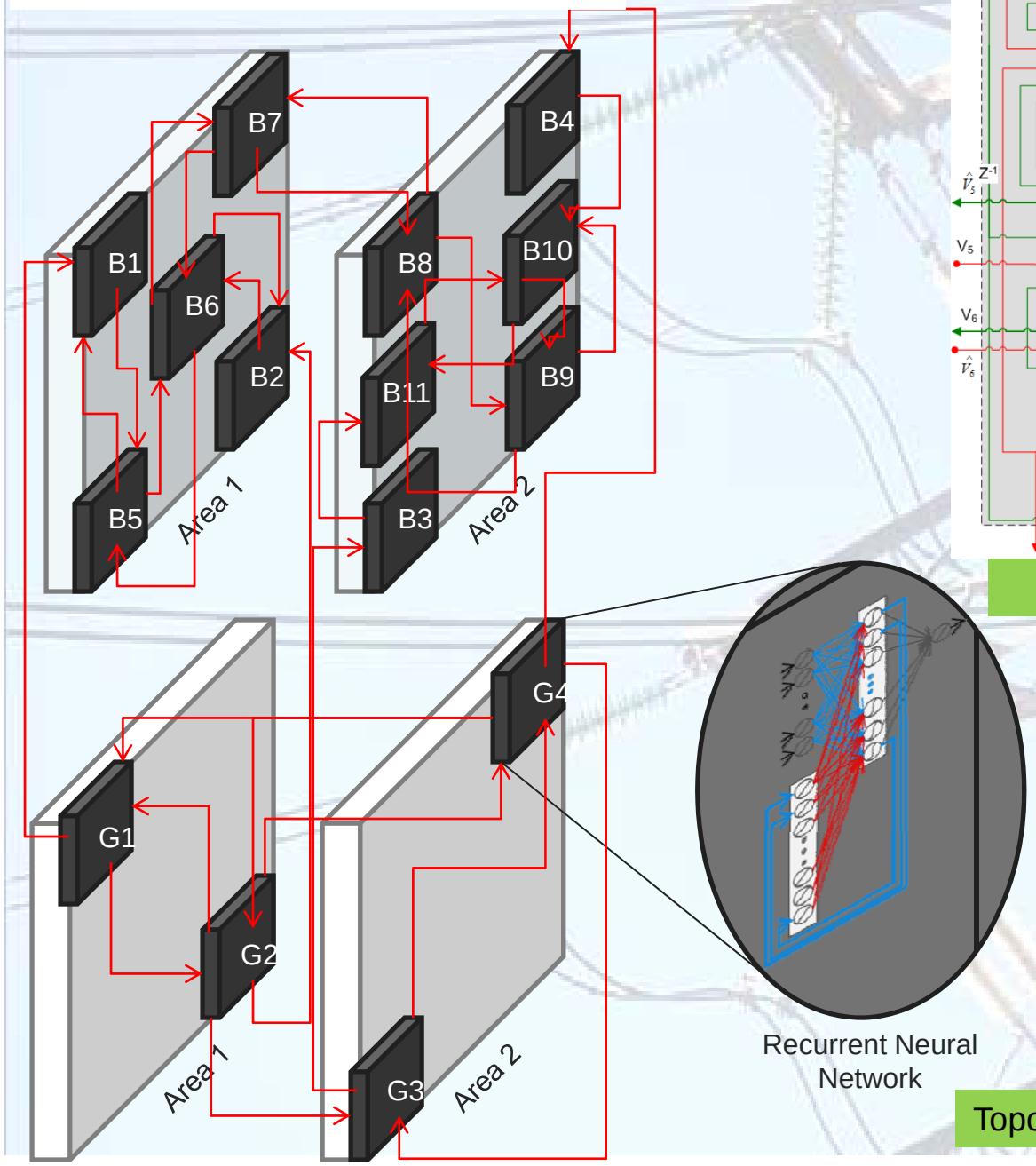

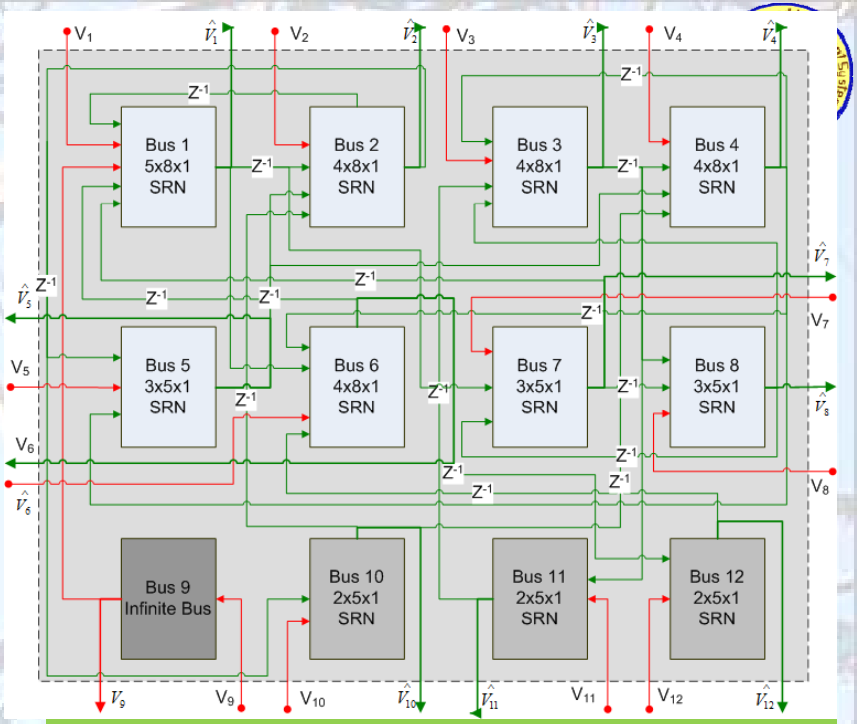

Topology mapping for voltage prediction

Recurrent Neural Network

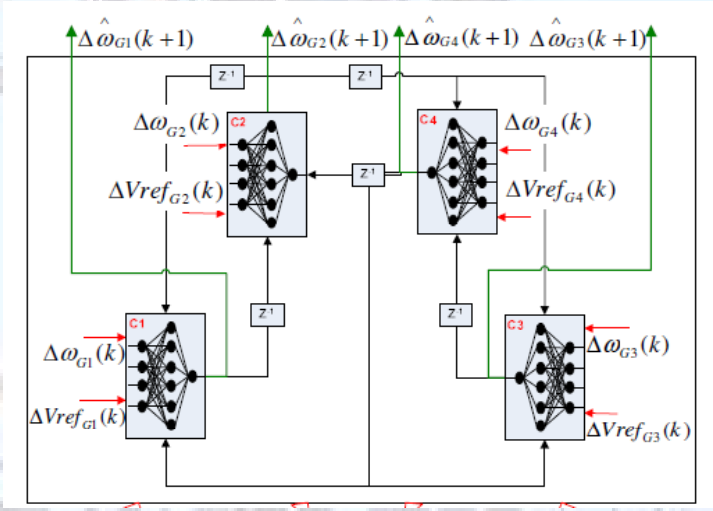

Topology mapping for speed deviation prediction

CNN Based Wide Area Monitoring and Control System

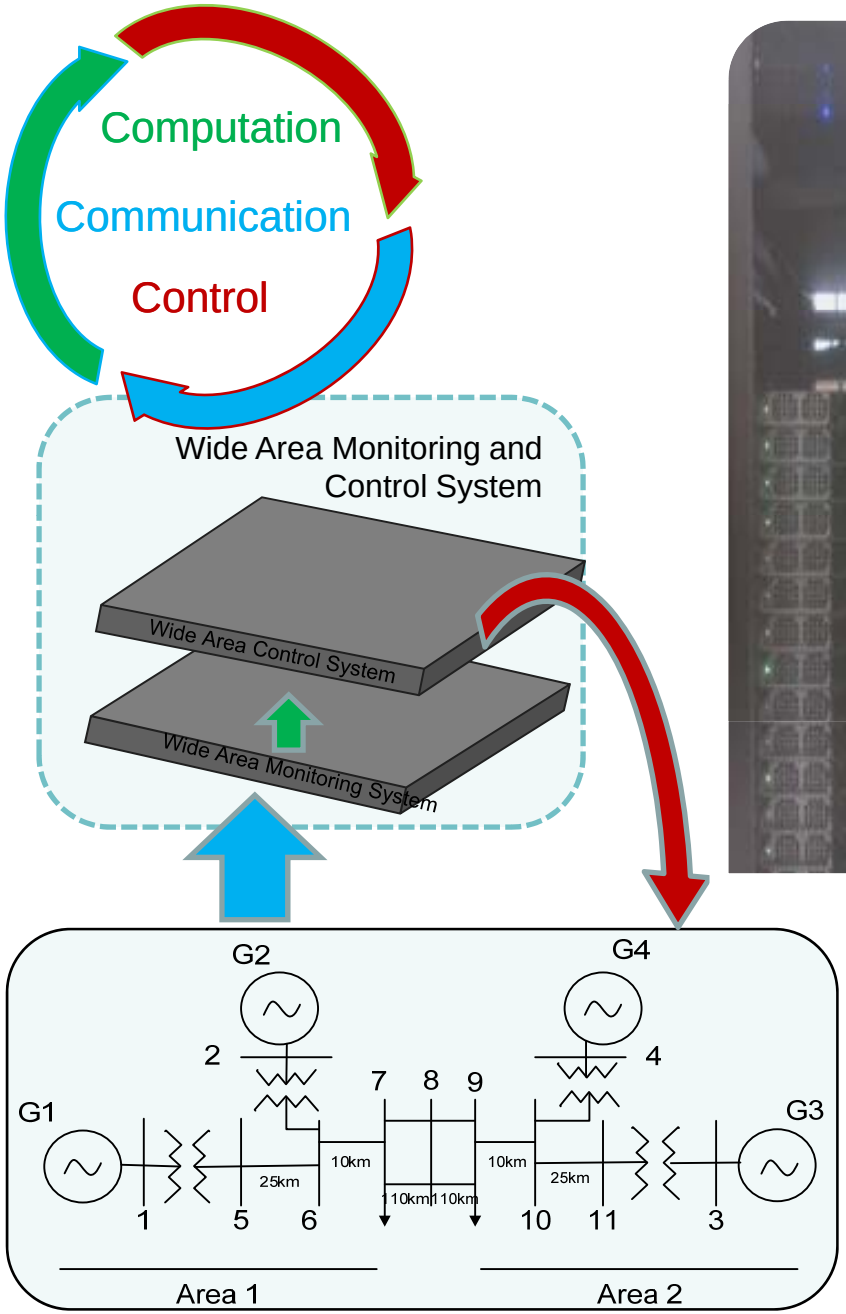

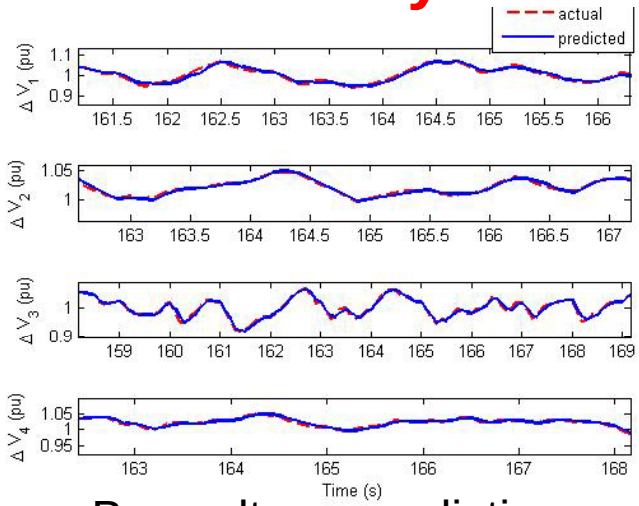

Bus voltage prediction

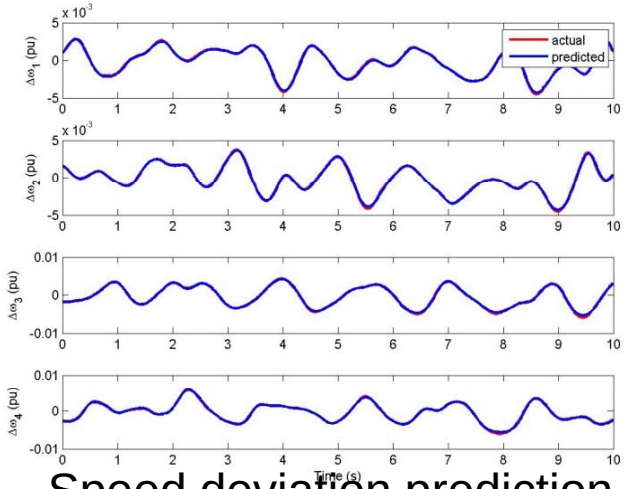

Speed deviation prediction

Luitel B, GK Venayagamoorthy, "Wide Area Monitoring in Power Systems Using Cellular Neural Networks," *IEEE Symposium Series on Computational Intelligence* (*SSCI*) 2011 - *CIASG*, April 11-15, 2011

Outline

- Introduction
- Smart Grid
- Emerging Computational Methods
- Wide Area Control Systems
- Plug-in Electric Vehicles – G2V and V2G Transactions
- Brain2Grid Project
- **Summary**

© G. Kumar Venayagamoorthy – A Keynote Presentation at the Fourth International Symposium on Resilient Control Systems, Boise, ID, USA, August 9, 2011

Summary

- A smart grid can be viewed as a digital upgrade of the existing electricity infrastructure and the way forward for *energizing our future*.
- Advanced computational and information technologies (CSTMs) are needed for planning and optimization, fast control of smart grid elements and systems, processing of field data and fast coordination across the grid.
- Distributed and coordinated intelligence at all levels and across levels of the grid – generation, transmission and distribution is inevitable if a 'true smart grid' is to be a reality and its benefits are to be harvested.
- Potential economic benefits of applying these emerging computational paradigms for smart grid operations are several including:
  - avoiding widespread blackouts
  - reducing congestion costs
  - minimizing energy costs and
  - maximizing emission reductions.
- The electric power grid is smart with its own nervous and immune systems.

© G. Kumar Venayagamoorthy – A Keynote Presentation at the Fourth International Symposium on Resilient Control Systems, Boise, ID, USA, August 9, 2011

EFRI-COPN: Neuroscience and Neural Networks for Engineering the Future Intelligent Electric Power Grid

EFRI # 0836017 –
Project Duration: November 1, 2008 to October 31, 2012

Principal Investigator:
Ganesh Kumar Venayagamoorthy
gkumar@ieee.org

Co-Principal Investigators:
Steve Potter , Ronald Harley
& Donald Wunsch

Senior Personnel:
Keith Corzine

http://brain2grid.org

© G. Kumar Venayagamoorthy – A Keynote Presentation at the Fourth International Symposium on Resilient Control Systems, Boise, ID, USA, August 9, 2011

Thank you!

G. Kumar Venayagamoorthy, PhD, FIET, FSAIEE, SMIEEE

Founder and Director of the Real-Time Power and Intelligent Systems Laboratory
Professor of Electrical and Computer Engineering (eff. 9/11)
Missouri University of Science and Technology, Rolla, MO, USA

http://www.mst.edu/~ganeshv
http://rtpis.org &
http://brain2grid.org

gkumar@ieee.org
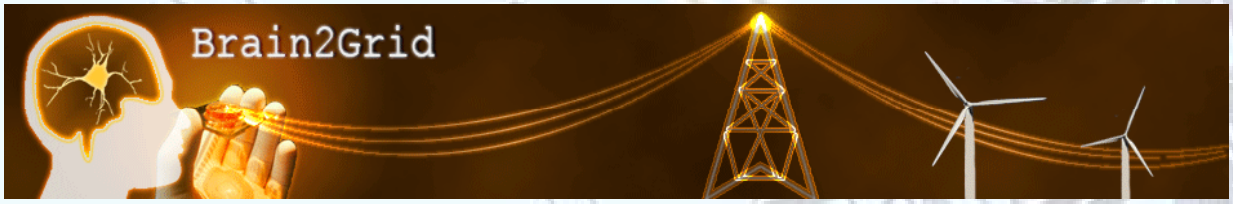
August 9, 2011